Automation and Surveillance System using GSM-DTMF Technology

JAYAKUMAR.S
jaykumar.s.micheal@gmail.com
9952229803

Final Year Student of Electronics and Communication Engineering
Misrimal Navajee Munoth Jain Engineering College,
Anna University, Chennai.

Abstract: ***In our modern society, Automation systems are in very high demand. By automation in all daily processes, the ease of living is increased substantially. By using the unparalleled connectivity of the Global System for Mobile Communication (GSM), an inexpensive and easy method of controlling the electrical devices present in homes or industries can be achieved. Using GSM, the control and monitoring of the appliances can be done in a very efficient manner. For surveillence purpose, the tone generation known as DTMF is used(Dual tone multi frequency) which is transmitted through a cellular network. These sets of DTMFs are transmitted to control the motor operations of a surveillance machine. The visual image of the vehicle's location is also transmitted either through cellular network or wireless-fidelity.***

I.INTRODUCTION

Global System for Mobile Communications (GSM) is the standar s developed by the European Telecommunication
Standards Institute (ETSI) to describe the cellular netwok. Mobile phone is a revolutionary invention of the century. It was primarily designed for making and receiving calls & text messages, but it has become the whole world after the Smart phone comes into the picture. In this project we are building a home automation system, where one can control the home appliances, using the simple **GSM based phone**, just by sending SMS through his phone. In this project, no Smart
phone is needed, just the old GSM phone will work to switch ON and OFF any home electronic appliances, from anywhere. In this system, Arduino is used for controlling whole the process. Here we have used GSM wireless communication for controlling home appliances. We used some commands like "#A.light on*", "#A.light off*" and so on for controlling AC home appliances. After receiving given commands by Arduino through GSM, Arduino send signal to relays, to switch ON or OFF the home appliances using a relay driver.

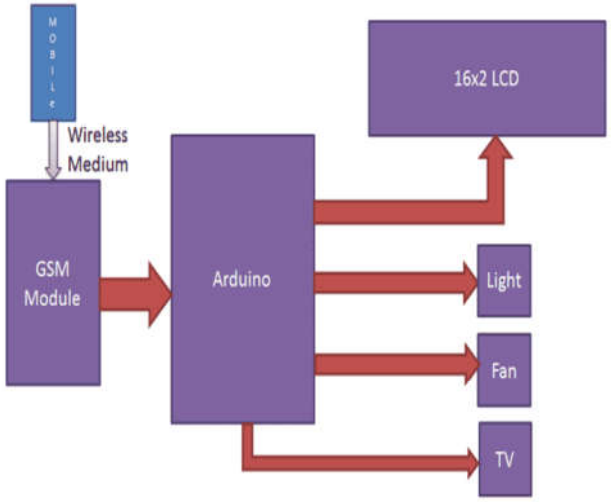

II.GSM Module:

GSM module is used in many communication devices which are based on GSM (Global System for Mobile Communications) technology. It is used to interact with GSM network using a computer. GSM module only understands **AT commands**, and can respond accordingly

The most basic command is "AT", if GSM respond OK then it is working good otherwise it respond with "ERROR". There are various AT commands like ATA for answer a call, ATD to dial a call, AT+CMGR to read the message, AT+CMGS to send the sms etc. AT commands should be followed by Carriage return i.e. \r (0D in hex), like "AT+CMGS\r". We can use GSM

ATE0 - For echo off

AT+CNMI=2,2,0,0,0 <ENTER> - Auto opened message Receiving. (No need to open message)

ATD<Mobile Number>; <ENTER> - making a call (ATD+919610126059;\r\n)

AT+CMGF=1 <ENTER> - Selecting Text mode

AT+CMGS="Mobile Number" <ENTER> - Assigning recipient's mobile number

>>Now we can write our message

>>After writing message

Ctrl+Z send message command (26 in decimal).

ENTER=0x0d in HEX



The **SIM900** is a complete Quad-band **GSM/GPRS Module** which delivers GSM/GPRS 850/900/1800/1900MHz performance for voice, SMS and Data with low power consumption.

Circuit Description

Connections of this **GSM based home automation circuit** are quite simple, here a liquid crystal display is used for displaying status of home appliances which is directly connected to arduino in 4-bit mode. Data pins of LCD namely RS, EN, D4, D5, D6, D7 are connected to arduino digital pin number 6, 7, 8, 9, 10, 11. And Rx and Tx pin of GSM module is directly connected at Tx and Rx pin of Arduino respectively. And GSM module is powered by using a 12 volt adaptor. 5 volt SPDT 3 relays are used for controlling LIGHT, FAN and TV. And relays are connected to arduino pin number 3, 4 and 5 through relay driver ULN2003 for controlling LIGHT, FAN and TV respectively.

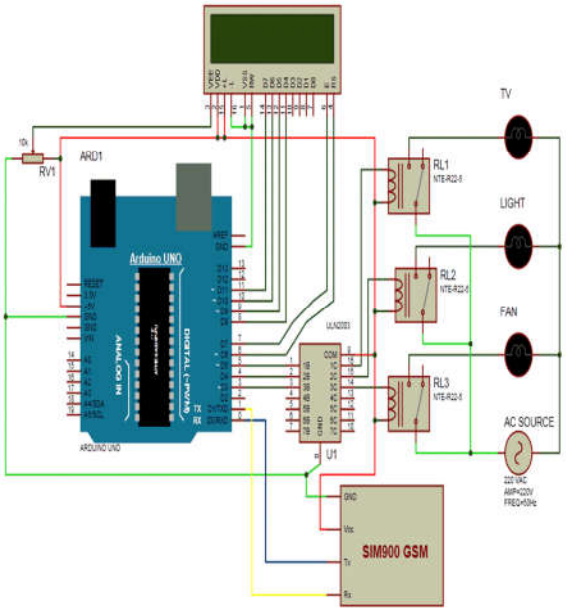

Code Description

In programming part of this project, first of all in programming we includes library for liquid crystal display and then we defines data and control pins for LCD and home appliances.

A dedicated IP (Internet Protocol) is a unique Internet address dedicated exclusively to a single hosting account. This is in contrast to the normal

configuration of several hosting accounts residing on a single server and sharing its IP address.

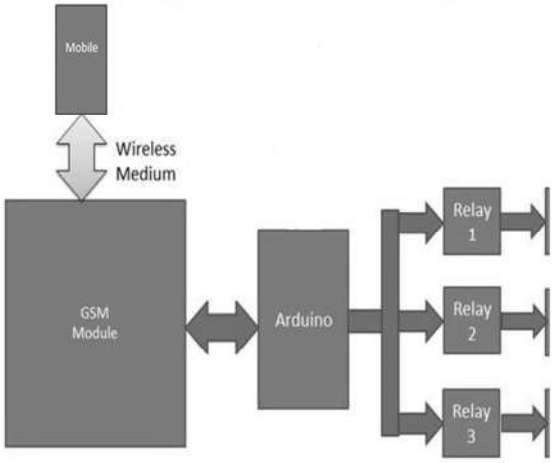

As seen above, we send an SMS from a mobile device, through the GSM network, to the GSM Module present in the automation system.

The messages being sent for the control are pre-programmed into the Microcontroller. Thus, it

compares the string with the message string, and performs the requisite action required.

For example, for controlling a television and a pair of lights, the string commands may be given as:

String TV_ON="TV ON";
String TV_OFF="TV OFF";
String LIGHT1_ON="Light 1 ON";
String LIGHT1_OFF="Light 1 OFF";
String LIGHT2_ON="Light 2 ON";
String LIGHT2_OFF="Light 2 OFF";

Now, if the above strings are sent through SMS, the GSM module receives the string, and stores the string in an array present in it, known as the STR array. The module then extracts the message and the mobile number from which it is sent. The message sent is stored within an asterisk and a hash symbol, that is, the message must be sent to the module in the format of *Light 1 ON#, such that the string comparison function may be performed. The separated message is then compared with the pre-programmed message in the Microcontroller, and if the strings are matched, then it perform.

III. DTMF TECHNOLOGY:

Dual-tone multi-frequency signaling (DTMF) is an in-band telecommunication signaling system using the voice-frequency band over telephone lines between telephone equipment and other communications devices and switching centers. DTMF was first developed in the Bell System in the United States, and became known under the trademark Touch-Tone for use in push-button telephones supplied to telephone customers starting in 1963.

The touch-tone system using a telephone keypad gradually replaced the use of rotary dial and has become the industry standard for landline and mobile service. Other multi-frequency systems are used for internal signaling within the telephone network.

Multi-frequency signaling is a group of signaling methods that use a

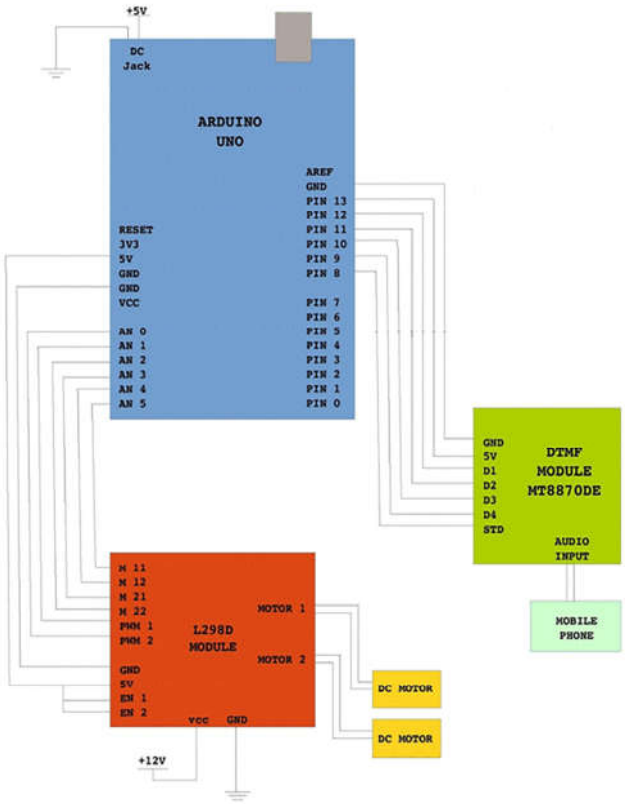

mixture of two pure tone sounds. Various MF signaling protocols were

devised by the Bell System and CCITT. The earliest of these were for in-band signaling between switching centers, where long-distance telephone operations used a 16-digit keypad to input the next potion of the destination telephone number in order to contact the next downstream long-distance telephone operator. This semi- automated signaling and switching proved successful in both speed and cost effectiveness. Based on thus prior success with using MF by specialists to establish long-distance telephone calls , dual-tone multi-frequency signaling was developed for end-user signaling without the assistance of operators.

IV.Construction:

	1209 Hz	1336 Hz	1477 Hz	1633 Hz
697 Hz	1	2	3	A
770 Hz	4	5	6	B
852 Hz	7	8	9	C

The construction of the robot is of three steps. They are IC circuit assembly, rover body and camera mounting on the designed vehicle. In IC circuitassembly, it is nothing but the PCB board which controls the movement of the vehicle according to the instruction given by the user. Here we are using three main IC's. They are,

1. DTMF Decoder

The IC MT8870 is known as the DTMF Decoder which gets the input frequency generated from the user mobile phone as DTMF tone, converts them into the binary digits and sends it to the microcontroller as inputs.

2. Microcontroller

The Microcontroller is the heart of the vehicle which controls the motion of the vehicle according to the user instructions. Here we are using AT89c51 microcontroller and the program coding was written in ASM program and fed into the microcontroller IC using KEIL compiler.

3. Motor Driver

Since the output supply from the microcontroller is not sufficient to run the motors hence a motor driver IC is used. The IC L293D is known as the motor driver IC which inherits H-Bridge concept and is able to run the two motors simultaneously at different directions.

Rover Body:

The rover body is the mechanical design of the vehicle which consists of motors, robotic wheels steel and fibre glass sheets ,etc., The design of the vehicle is made as robust to withstand disturbances and vibrations carrying power supply, camera, IC circuit board,etc., on the vehicle.

Camera Installation:

The Internet Protocol (IP) camera is used in our project for the surveillance purposes. This camera is properly configured in the user system so that able to view the pictures captured by the camera during the movement of the vehicle. The wireless antenna present in the camera is employed to transmit the data to the user system.

Simulation:

The simulation for this project is done using the PROTEUS software. Here the program for the microcontroller is written using ASM program and is fed into microcontroller.

V. Conclusion

It can be seen that this is a very efficient method of Home Automation. The major advantage is that the appliances can be controlled from literally anywhere in the world. Since GSM connectivity is present worldwide, it is a very useful system.
It is also very simple, and the strings used to control the appliances can be suitable modified according to the needs of the user.

VI. Scope for Implementation

These GSM based Home Automation systems are inexpensive, and their ease and flexibility of usage is unparalleled. Futuristic homes may be attached with a main GSM module, where a SIM card may be installed, and connections may be provided to all the household appliances. Just by sending a simple SMS message, all the devices and home appliances can be controlled. Such is the power of the GSM network.

VII. ADVANTAGES:

- Cost effective.
- Operable over both cellular and Wi-fi network.
- Easy available components
- Energy efficient.
- Ease of operation.
- Control is more secure as it is password protected.

VIII. APPLICATIONS:

- Highly compatible in Defense systems.
- Home security.
- Long-distance Machine Control

References:

[1] The 8051 Microcontroller and Embedded System: usingAssembly and C, 2nd Edition, ISBN: 9780131194021 by Mazidi, Muhammad Ali.

[2] AT89C51 detail, available http://www.ic--online. Cn/iol_AT89S51/PdfView/103030/

[3] DTMF Decoder datasheet, available http:// http://www.8051projects.info/exp11.asp

[4] Motor driver ic- datasheet available http:// http://www.engineersgarage.com/electronic-components/l293dmotordriver-ic\

[5] http://www.8051projects.net/tags/keil-microvision-3

[6] Keil micro vision, available in http:// http://www.keil.com/c51/