A study on Honeycomb Sandwich Panel and its Expansion Machine(HCXM)

Jeyakrishnan P R, Vinothkanna R, Vinoth N and Vignesh R
Department of Mechanical Engineering,
Sri Krishna college of Engineeringand technology, Coimbatore.

ABSTRACT:

An avant–garde study on honeycomb panel expansion machine to fabricate honeycomb sandwich panel. This panel consists of two thin sheets in which a light weight thick core is placed in between them. Usually, aluminum & magnesium are considered for the fabrication of honey comb panel for economic considerations. Titanium alloys are considered for specific applications such as aerospace structures. Conventionally, the honeycomb panels are manufactured by the processes such as welding, brazing, forming. Nowadays, adhesive bonding also considered for manufacturing of honeycomb sandwich panels. During the process, honey comb core is in the form of HOBE then it will expanded to required cell size by using machine known as honeycomb sandwich panel expansion machine (HCXM). Initially, HOBE form of honeycomb panel is made up with paper model. And top and bottom platen is also made up with paper model. To ensure the operation feasibility, then the study has been carried out on the fabrication of aluminum alloys using HCXM as per ASTM standards.

Keywords: **Honey Comb Sandwich Panel -HOBE-Honey Comb Panel Expansion Machine (HCXM) – Adhesives.**

INTRODUCTION:

The project of honeycomb structure machine is fabricated using conventional fabrication methods. In this process Instead of using conventional fabrication processes, we considered bonding process , it can be pasted directly and expanded in required level. In this project we are using the adhesive of araldite for bonding process. It can be expanded in various shapes like square, hexagonal etc., we can create a machine using ASTM standards. This is a simple and unique process fabrication.The honeycomb sandwich construction is one of the most valued structural engineering innovations developed by the composites industry.Used extensively in aerospace and many other industries, the honeycomb sandwich provides the following key benefitsover conventional materials:

- Very low weight

- High stiffness
- Durability
- Production cost savings

This guide explains how to design and manufacturehoneycomb sandwich panels, from materials selection andanalysis of mechanical properties, through to productionmethods, and includes basic sample calculations for simpleconstructions.

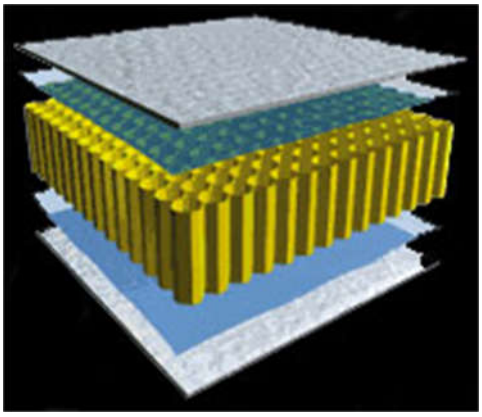

FIGURE 1

TERMINOLOGIES USED:

Cell Size

A large cell size is the lower cost option, but in combinationwith thin skins may result in telegraphing, i.e. a .dimpled. outersurface of the sandwich. A small cell size will give an improvedsurface appearance, and provides a greater bonding area, butat higher cost.

Cell Shape

Normally supplied with hexagonal cell shapes, a fewhoneycomb types can be supplied with rectangular cell shapes. Hexagonal cells give minimum density for a given amount ofmaterial.Rectangular cells give easier forming in the W direction (with less anticlastic curvature than is exhibited by hexagonal cellhoneycomb).

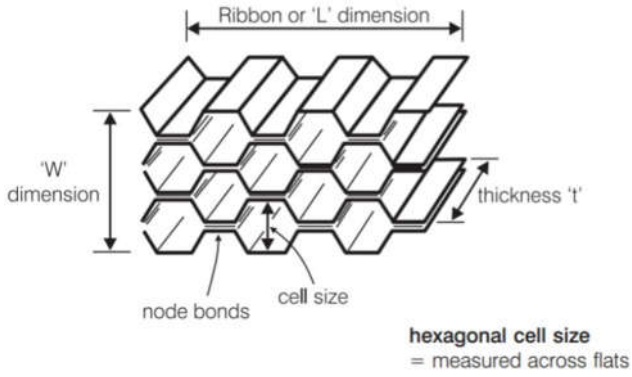

FIGURE 2

Skin Materials

Skin considerations include the weight targets, possible abuses and local (denting) loads, corrosion or decorativeconstraints, and costs. Facing material thickness directly affects both the skin stressand panel deflection

STRUCTURAL AND ENVIRONMENTAL CONSIDERATIONS OF HONEY COMB PANEL

Adhesive Performance:
The adhesive must rigidly attach the facings to the corematerial in order for loads to be transmitted from one facing tothe other. Suitable adhesives include high modulus, highstrength materials available as liquids, pastes or dry films. As a general rule, a low peel-strength, or relatively brittle adhesiveshould never be used with very light sandwich structures whichmay be subjected to abuse or damage in storage, handling orservice.

Economic Considerations:

Composite sandwich panels can provide a cost effectivesolution. Value analysis should include assessment ofproduction and

assembly costs; and installation costs includingsupporting structure.

Environmental Considerations
Temperature:

As in any materials system the thermal environment will play animportant role in the selection of materials.All systems are basically operational at Room Temperature andmaterials are readily available to give performance up from-55°C to 170°C.Material selection should also take account of availablemanufacturing facilities, especially cure temperature capability.

Heat Transfer:

The transfer of heat through a sandwich panel is dependentupon the basic principles of convection, conduction andradiation. Metallic cores with metallic facings maximise heatflow characteristics.

Moisture/Humidity:

Some core and facing materials offer excellent resistance todegradation due to moisture and humidity.

Adhesive Solvents and Outgassing:

Some adhesives give off gases or solvent vapours during curewhich can interact with resin systems in some non-metalliccores, or with the node adhesive in some metallic honeycombs. The entire bonding process must be checked toensure that no reduction in mechanical properties hasoccurred due to incompatibility of the materials or process actually used.

.

WEIGHT AND STIFFNESS COMPARISION OF SOLID PANELS:

The facing skins of a sandwich panel can be compared to theflanges of an I-beam, as they carry the bending stresses towhich the beam is subjected. With one facing skin incompression, the other is in tension. Similarly the honeycombcore corresponds to the web of the I-beam. The core resiststhe shear loads, increases the stiffness of the structure byholding the facing skins apart, and improving on the I-beam, it gives continuous support to the flanges or facing skins toproduce a uniformly stiffened panel. The core-to-skin adhesiverigidly joins the sandwich components and allows them to actas one unit with a high torsional and bending rigidity.

.

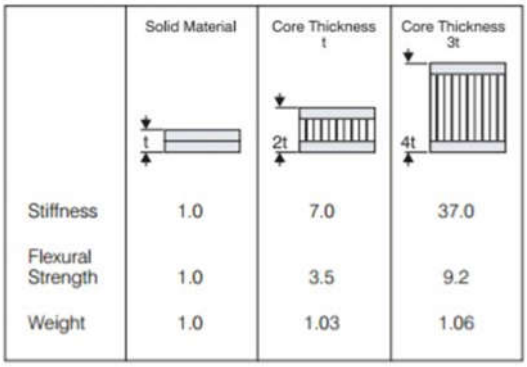

FIGURE 3

Figure 3 shows the relative stiffness and weight of sandwich panels compared to solid panels.

COMPUTER MODELLING OF HONEYCOMB SANDWICH PANELS

Before analysing a large structure the modelling techniqueshould be checked by modelling a simple panel with knownresults.The above simplistic approach

has proven to give reasonableengineering solutions for practical applications.The actual force/stress distribution within a honeycombsandwich structure is a complex subject, and is beyond thescope of this publication.For a more sophisticated analysis of a structure, consideringthe sandwich panel to be subjected to a combination of forces,a technique such as Finite Element Analysis (FEA) might beused.In general terms, the shear forces normal to the panel will becarried by the honeycomb core. Bending moments and inplaneforces on the panel will be carried as membrane forcesin the facing skins.For many practical cases, where the span of the panel is largecompared to its thickness, the shear deflection will benegligible. In these cases, it may be possible to obtainreasonable results by modelling the structure using composite
shell elements. It should be noted that the in-plane stiffness ofthe honeycomb is negligible compared to that of the facingskins.Where a more detailed model is required it is possible tomodel the honeycomb core using solid 3D elements. Attemptsto model the individual cells of the honeycomb should beavoided for normal engineering analyses.

Mechanical performances:

Honeycomb strength and stiffness (compression and shear) isproportional to density. Relative performance of the material types is shown in comparison to PVC foam.

Key: Aluminium - 3003/ACG; 5052; 5056
Nomex - HRH10; HRH78;
Fibreglass - HRP

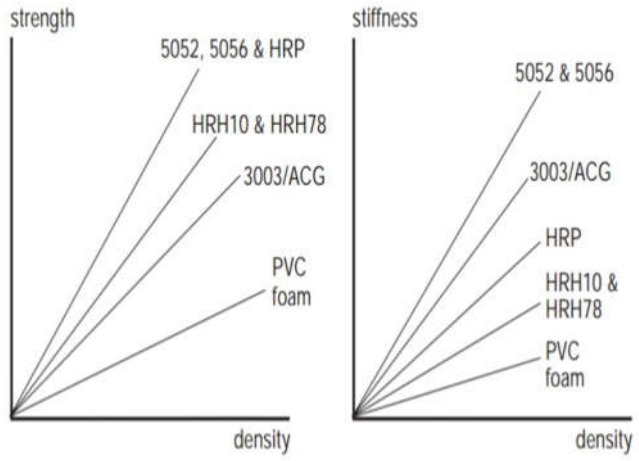

FIGURE 4

As the density increases, both the strength and stiffness also increases for the above materials.

MECHANICAL PERFOMENCES OF 3003 ALUMINIUM HONEY COMB PANEL AT ROOM TEMPRATURE.

PRODUCT CONSTRUCTION		COMPRESSION		PLATE SHEAR			
Density	Cell Size*	Stabilized		L Direction		W Direction	
kg/m³ (lb/ft³)	mm (in)	Strength MPa	Modulus MPa	Strength MPa	Modulus MPa	Strength MPa	Modulus MPa
3003 Aluminium							
29 (1.8)	19 (3/4)	0.9	165	0.65	110	0.4	55
37 (2.3)	9 (3/8)	1.4	240	0.8	190	0.45	90
42 (2.6)	13 (1/2)	1.5	275	0.9	220	0.5	100
54 (3.4)	6 (1/4)	2.5	540	1.4	260	0.85	130
59 (3.7)	9 (3/8)	2.6	630	1.45	280	0.9	140
83 (5.2)	6 (1/4)	4.6	1000	2.4	440	1.5	220

Facing Stress

Facing stress = $P/(2t_f b)$

assuming end load is taken by both skins, and applied load
$P = q \times b$

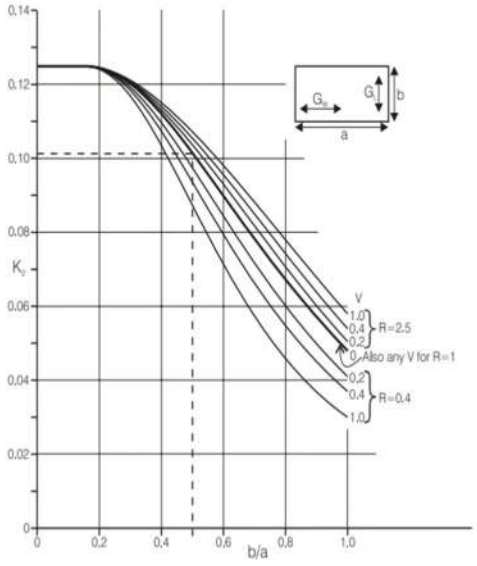

HONEY COMB PANEL EXPANSION MACHINE(HCXM)

GRAPH FOR FACING STRESS



CONSTRUCTION OF HCXM;

This HCXM mainly consists of two columns which is made up of stainless steel(SS).There are two platens in which the clamps are placed. The upper platen is fixed and the lower platen is movable. To achieve the better structures of honeycomb panels the bolts are provided at the top and bottom end in order to fix the hobe tightly in the clamps. The holes in the clamps are used to fix the ends of hobes by using fastners .And just below the lower part of clamp the threaded shaft is placed and a bevel gear is attached to it at the bottom of the shaft. This gear is meshed with the another bevel gear which is connected to the shaft which has a belt drive which is centered and each bearing is attached to it in order to rotate the shaft freely at both the sides. The centralised belt drive this then connected to the electric motor. This electric motor is used to drive the machine by giving the electric supply to the motor. In order to avoid the vibrations the lower end of the machine is welded with motor placing metal table.

WORKING OF HCXM;

The motor starts rotating by giving the supply of electric current to it .As the motor starts rotating the shaft attached with it also rotates. In the right end a beltdrive is attached to it. Then the shaft also rotates in which the other end of the beltdrive is attached. At the left end of this shaft a bevel gear is attached which rotates in the clockwise direction and it is meshed with the other bevel gear which rotates in anticlockwise direction. As the gears rotates the threaded Shaft also moves in the upward direction. There are two rods which are attached to the lower jaw of clamps. As the threaded shaft moves upwards then the movable lower jaw of clamps moves downwards in which the lower end of the hobes are attached. As the lower jaw moves down then the required cell size of the core is achieved by this machine.

Types of materials that can be fabricated using this machine;

- Paper
- Metals
- plastics

Advantages of HCXM:

- Light weight
- Easy fabrication
- High specific stiffness
- Good damping
- Material requirements is less
- Compressive load high

Applications:

- Aerospace
- Shipping industrials
- Railways
- Textiles and ext.,

Types of adhesives used for the bonding of honeycomb cores

- Phenolic Resin Adhesives;
- Neoprene elastomer- Phenolic;
- Nit rile Elastomer – Phenolic;
- Polyvinyl Phenolic;
- Epoxy Resin adhesives such as Epoxy Phenolic, Epoxy polyamide and Modified Epoxy resin,
- ARALDITE

ADHESIVE BONDING

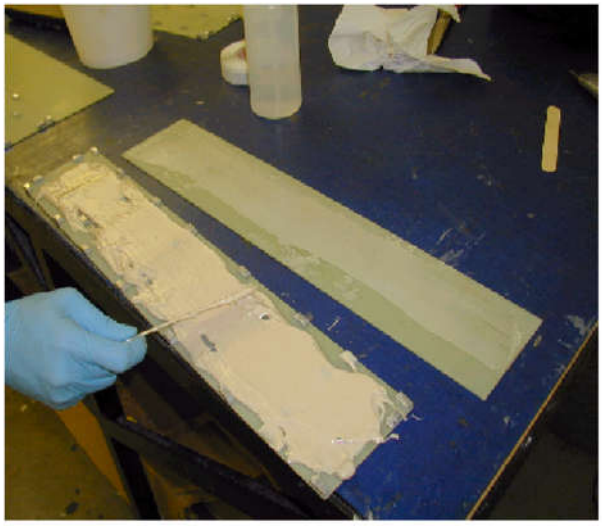

ABBREVATIONS USED;

HCXM-HoneyComb sandwich panel Expansion Machine.
ASTM-American Society for Testing and Materials.
PVC foam-Poly Vinyl Chloride foam.
SS-Stainless Steel

CONCLUSION AND RESULT;

In this project, a detailed study has been carried out about the honeycomb sandwich panels and its expansion machine. By using the honeycomb structures high strength and stiffness can be achieved. Inthe fabrication of honey comb sandwich panels adhesive bonding also usually considered for manufacturing of honey comb sandwich panels due to its inherent properties for ensuring bond strength and other mechanical properties flat wise tensile strength even at elevated temperature. These honeycomb structured panels are widely used in automobiles, aerospace, railways, shipping industries.

ACKNOWLEDGEMENT;

We are very thankful to all the faculty members for guiding and motivating us to work on this project. Their support and guidance while doing the project was invaluable. We would like to thank our HOD and the professor Jeyakrishnan PR for giving us support and allowing us to work in labs. We are also thankful to SKCET for giving us adequate resources to work on the project. Finally, we thank our friends and parents who helped us whenever we faced difficulties.

REFRENCES;

- H.G. Allen. Analysis and Design of Structural Sandwich Panels. Pergamon Press; 1969.
- Structural Sandwich Composites. MIL-HDBK 23-A.
- Operation manual of Honeycomb sandwich design technology by Hexcel composites California, USA.
- An Article on the study on NDT curve establishment of AA 5052 honeycomb sandwich panel using Fokker bond tester.
- Studies on buckling behavior of honeycomb sandwich panels by P.R.Jeyakrishnan, KnK.S.K.Chockalingam, R.Narayanasamy.

- Self similar hierarchical honeycombs by Babak Haghpanah, RaminOftadeh, Ashkan Vaziri.