Analysis and Design of a Fuzzy Logic Controller for a Trans-Inverse DC DC Converter

Aammat ul Ayesha[1] & Dr. Dhanalakshmi R[2]

[1]*Student, Department of E&E, DSCE, Bengaluru, Karnataka, India*

[2]*Professor, Department of E&E, DSCE, Bengaluru, Karnataka, India*

Abstract: *This paper presents the design analysis of a fuzzy logic controller using the output voltage as feedback to improve the dynamic performance of a trans-inverse dc-dc converter using MATLAB/Simulink software. The objective of the proposed methodology is to design a fuzzy logic controller for a trans-inverse dc-dc converter for obtaining a better response of the system using MATLAB/Simulink software. The FLC is implemented by using a fuzzy logic control algorithm. This design was compared to the PID controller (Proportional Integrated Derivative). The simulation study of the complete control system was done and the system was analyzed and validated. The performance was then assessed in detail for both closed loop systems and their comparison shows the difference by the obtained simulation results.*

Keywords: **Trans-Inverse, PID, FLC, DC DC Converter.**

1. Introduction

DC-DC converters are widely utilized in switching power supplies, variable speed drives, various uninterruptible power supplies and also many other applications for changing the level of an input voltage, for meeting the required operating conditions[1].

DC-DC converters are circuits that convert DC sources from one voltage level to another by changing the duty ratio of main switches in the circuits. The non-linear nature of the DC DC converter systems, represents a great challenge for the control system design. The classic control methods do not provide satisfactory results for operating point fluctuations and load disturbances, as they are designed for a nominal operating point conditions, and often do not work satisfactorily with large parameter or load fluctuations [2].

The innately non-linear characteristics of the DC-DC converters are caused due to the operation of the switching devices. Because of these undesirable non-linear properties, the converters require control with a high degree of dynamic response. Among the numerous switching control strategies, pulse width modulation is the most frequently considered strategy [3].

The most popular and most widely used controllers in most closed-loop power electronics applications are the conventional PI, PD and PID controllers. however, recently many researchers have reported that they have successfully adopted the Fuzzy Logic Controller (FLC) to be one of the smart controllers for their appliances [4].

Regarding their successful methodological implementation, the control closed-loop trans-reverse converter and open-loop trans-reverse converter will compare the efficiency of converters. This type of methodology implemented in this article uses a FLC with a voltage feedback introduction respectively. The input of the voltage output into the circuit is sent to the fuzzy logic controller to give a suitable measure of the signal at steady state. The FLC serves as a smart controller for this proposal and the proposed methodology can be easily applied to many DC-DC conversion topologies.

Fuzzy Logic Controller mostly uses Fuzzy set theory application. In this article, fuzzy logic controller is used to control the operating circuit and is more simple among other controllers. A fuzzy group is described by the membership function that is the main component of the fuzzy process [5]. FLC is characterized by faster and more robust transient responses from several control modalities [6,7].

This article first presents a general MATLAB / Simulink oriented FLC algorithm. For the model system, five membership functions and a table of rules are described. The main purpose of this study is presented in section 4. In this section the proposed converter system is simulated using simple Simulink operating blocks. This simulation can generate two different solutions for the control of the converter system; one is the PID controller and the other is the FLC controller. In the last section, the simulation results for FLC are compared with the simulation results for the PID controller.

2. Operation of the Trans-Inverse converter

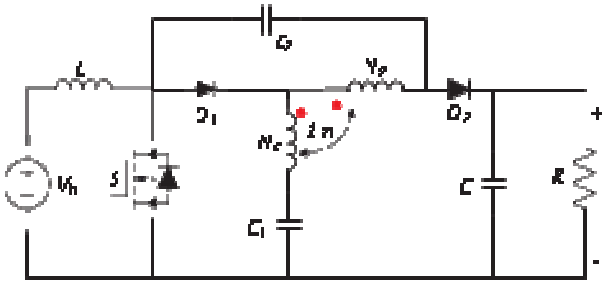

Fig 1. Schematic of the proposed converter.

The schematic of the proposed trans-reverse DC / DC converter is shown in the figure 1, which includes an input inductor L, a controlled switch S, three capacitors C1, C2, C, two diodes D1and D2, a leakage inductance Lm and a coupled inductor, whose turns ratio is given as n = Np/Ns .

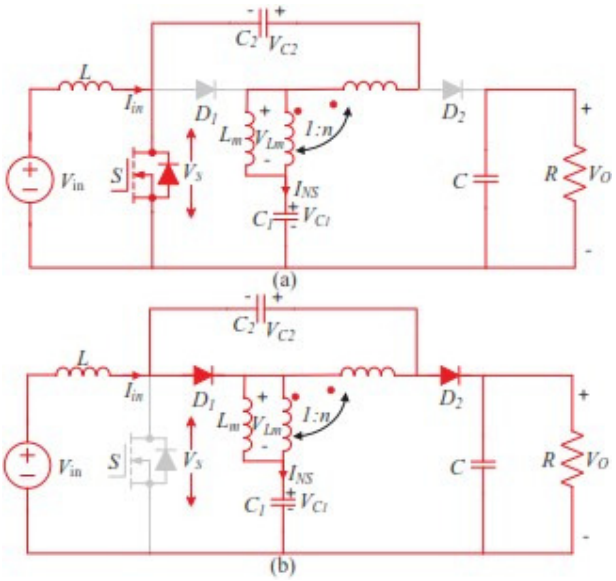

Fig.2. Equivalent circuits of the proposed converter when the switch turns (a) ON and (b) OFF

The two states in a switching cycle are shown in Fig. 2. When switch is ON, diodes D1 and D2 are reverse biased as shown in Fig.2(a) and the inductor L is charged by using the energy from the input source. As the diode D2 is off, the output load is isolated from the input source, the load R is supplied by the output capacitor C. By taking into account the Fig.2(a) that we can to write:

$$V_S = \frac{V_{c1} - V_{c2}}{n-1}$$

When the switch is OFF during the next half cycle, both diodes (D1,D2) are forward biased as shown in Figure 2 (b), and the stored energy from the inductor L is delivered to the load. The inductor current starts decreasing and the output capacitor C is charged. Now we can write from Fig. 2 (b):

$$V_S = \frac{V_{C1} - V_0}{n-1}$$

By applying the volt second balance principle:

$$DV_{in} + (1 - D)(V_{in} - V_{C2} - V_O) = 0$$

$$D\ \frac{V_{C2} - V_{C1}}{n-1} + (1 - D)\ \frac{V_{C1} - V_0}{n-1} = 0$$

The obtained voltage gains (V_{C1}, V_{C2}, V_0) are :

$$V_{C1} = \left(1 + \frac{nD/n-1}{1-D}\right) V_{in}$$

$$V_{C2} = \left(\frac{nD/n-1}{1-D}\right) V_{in}$$

$$V_0 = \left(\frac{1+nD/n-1}{1-D}\right) V_{in}$$

Where V_S is the secondary side inductance voltage, V_{C1} is the voltage across the capacitor C1, V_{C2} is the voltage across the capacitor C2 and V_0 is the output voltage of the converter.

3. Control Techniques for the proposed converter

Traditional PID Controller

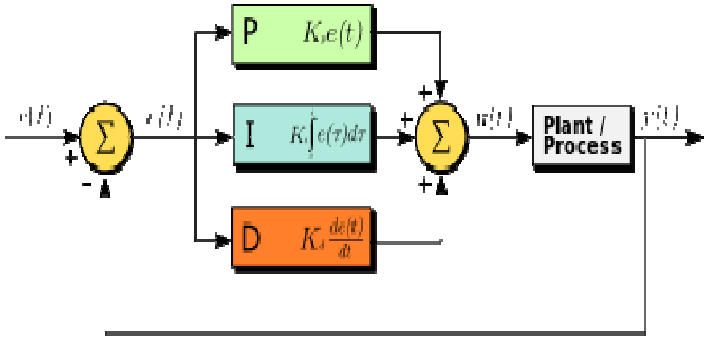

Fig. 4. Block diagram of traditional PID controller in feedback loop

The PID (proportional-integral-derivative) controller is one of the most popular and widely used feedback controllers in the processing industry. The algorithm is easy to understand and produces an excellent control.

The PID comprises of three essential modes which are proportional mode, integral mode and derivative mode. For the most part three employments of the fundamental calculation are P, PI and PID. It has a transfer function for each of the modes. The proportional controller (Kp) can minimize the error obtained but cannot completely eliminate it. The integral controller (Ki) can completely eliminate the steady state error

but the transient response may be worsened. The derivative controller can increase the stability of the system by reducing overshoot and improving the transient response.

During the design of a PID controller, several steps must be followed to get the desired output response. Implementation of all three controls is not necessary if they are not needed. If the P or PI control gives a good enough answer, it is not necessary to implement the derivative control.

The controllers usually react to the error between a selected set point and the deviation or error signal which is the difference between the value measured and the set point. Based on the frequency of a system, optimal values can be calculated and also higher gain makes the output change larger depending on the error. Integral part can be included with proportional part to get a better output response by returning the error to zero. The derivative can also be included as a momentary spike of corrective action that is reduced. The derivative can be bad with a noisy signal.

Proposed Fuzzy Logic Controller

The idea of fuzzy logic was presented by Lotfi Zadeh in 1965, and his mathematical modeling dealing with uncertainty. It offers a significant idea of delicate processing with words. It furnishes a strategy that manages imprecision. Fuzzy hypothesis gives an instrument to speaking to semantic, for example, "many", "low", "medium", "often", "few". In general, fuzzy logic provides an inference system that enables appropriate human thinking abilities. Fuzzy logic systems are suitable for rough thinking. Fuzzy logic systems provide a quicker response than traditional systems and the control intricacy is less. In a fuzzy inference system, the combination of IF-THEN vague rules for mapping from fuzzy sets in input space to output space is usually done on the basis of fuzzy logic principle. In a fuzzy logic system, knowledge representation, fuzzy IF-THEN rule is a strategy for gaining information that implies inaccuracies. The main feature of reasoning that uses fuzzy rules is its partial matching ability, an inference to be made by the fuzzy rule even when the conditions of the rule are partially satisfied. Block diagram of FLC is shown in the below fig 5.

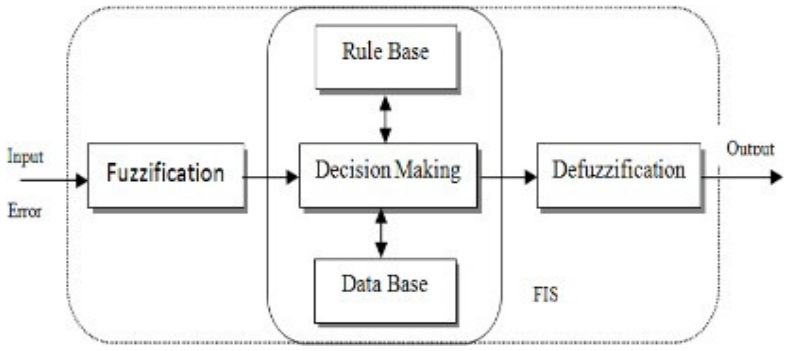

Fig 5. Block Diagram of Fuzzy Control System

Fuzzy Logic Controller comprises of three parts, to be specific fuzzification, fuzzy inference system and defuzzification. All in all, a fuzzy set is output to communicate a fuzzy variable that is defined by a membership function. The membership function values usually vary between 1 and 0. The IF-THEN rules are the core of the fuzzy rule base.

- Fuzzification: The process of converting input data into suitable linguistic values that is, converting the crisp facts into fuzzy sets described by linguistic expressions. The membership functions are usually triangular, trapezoidal in shape. Mamdani and Sugeno are the two fuzzification strategies that are mainly used. Plot of membership function for input error, change in error and output shown in Figures 6 (a),(b),(c) respectively.

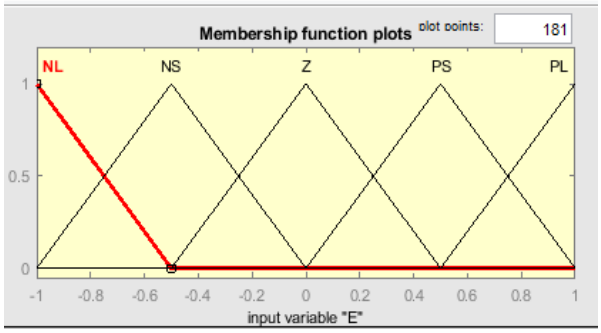

Fig 6(a) Plot of membership fuction for input variable 1 “Error”

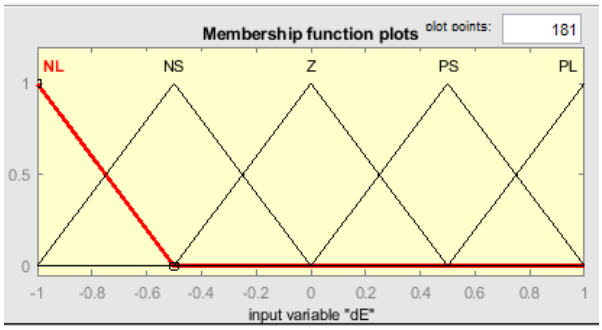

Fig 6(b) Plot of membership fuction for input variable 2 “change in error”

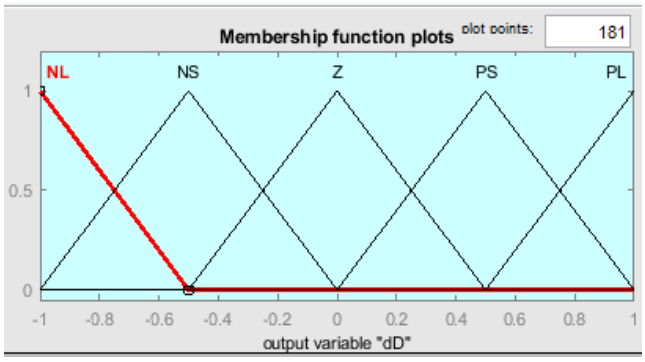

Fig 6(c) Plot of membership function for output variable

- Fuzzy inference system: The IF-THEN vague rule expresses an ambiguous implicit relationship between fuzzy sets of premise and fuzzy sets of inference. The IF Rules section describes the circumstances for which the rules are designed, and the THEN Rules section describes the fuzzy system response.

- Defuzzification: Different strategies can be utilized to obtain clear results of defuzzification, for instance bisector of the area, mean of maximum, adaptive integration, fuzzy cluster defuzzification, first of maximum, semi-linear defuzzification, quality method, for obtaining a crisp numeric output value.

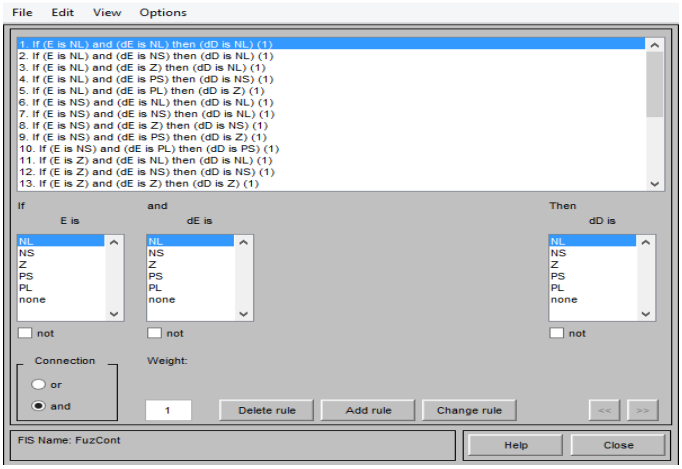

Fig 7(a) Fuzzy IF-THEN rules 1 to 13

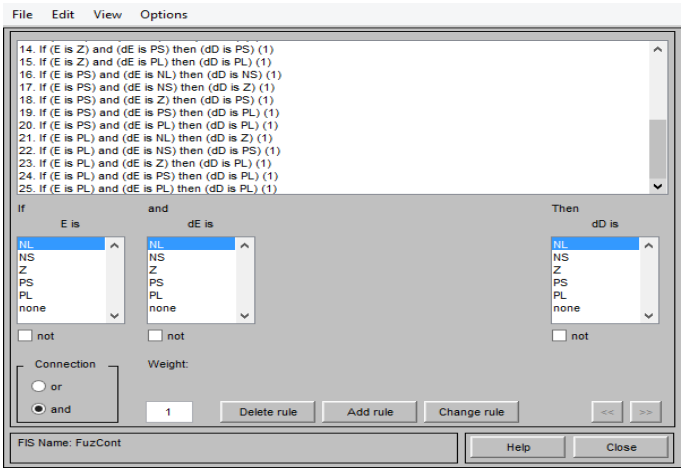

Fig 7(b) Fuzzy IF-THEN rules 14 to 25

4 Simulation Results

In this section, simulation of a trans-inverse DC DC converter circuit is carried out using the MATLAB/Simulink 2017b software. Closed loop MATLAB/Simulink model of the proposed converter with two different control techniques is presented and analyzed.

Table 1. Simulation parameters of the proposed converter

Parameters	Calculated Value
Input Voltage V_{in}	25V
Output Voltage, V_0	112.4V
Input Inductor L	640 µH
Duty Cycle, D	0.62
Capacitors C1, C2 and Co	100 µF
Switching Frequency, f	50KHz
Turns Ratio , N_p / N_s	31 / 4

Proposed Converter with PID controller

The fig 8 below shows the Simulink model of the proposed trans-inverse converter with PID controller. The Kp, Ki and Kd values for the PID controller are 0.8, 100 and 0 which are obtained by using the trial and error method. The simulation parameters are indicated in Table 1.

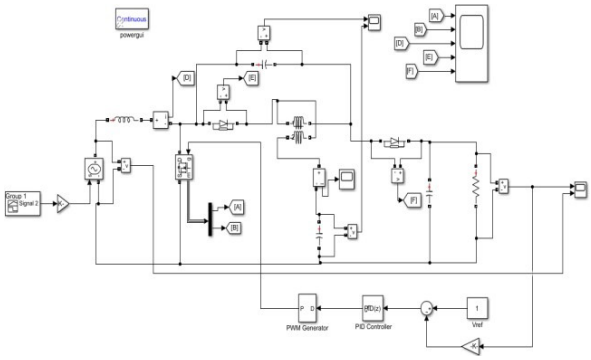

Fig 8. Simulink model of the proposed converter with PID controller

Proposed Converter with Fuzzy Logic Controller

Fig 9 shows the Simulink model for the proposed converter with the proposed Fuzzy Logic Controller having the simulation parameters as shown in table 1.

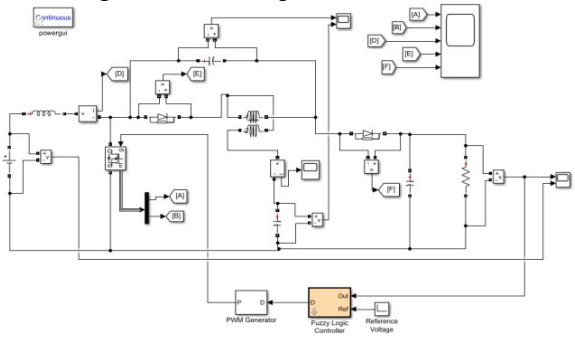

Fig 9. Simulink model of proposed converter with Fuzzy Logic Controller

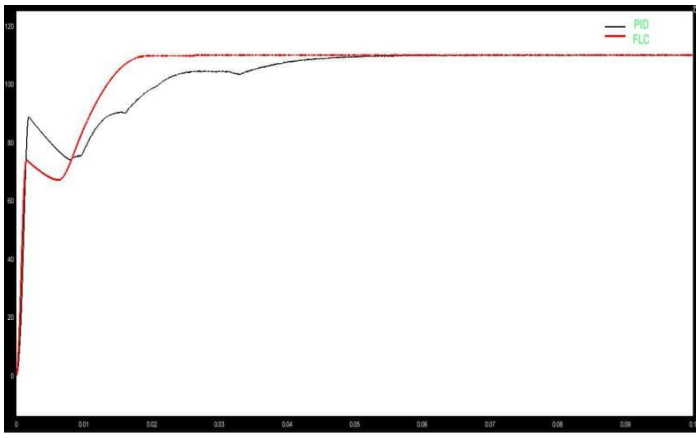

Fig 10. Comparison of output voltages of the proposed converter with different control techniques.

From the above fig.10 it is observed that the proposed converter with Fuzzy Logic control technique gives the output voltage with reduced settling time and low peak overshoot when compared to the PID control. Hence it can be concluded that the Fuzzy Logic control technique gives the better performance and more accurate results when compared to the PID. The table 2 below presents the comparison of the response of both PID and FLC controllers.

Table 2 Comparison table of the response of both the controllers

parameters	Overshoot %	Settling time
PID controller	0.4%	0.06
FLC controller	0.2%	0.02

5. Conclusion

In this article a Fuzzy Logic Controller (FLC) for a trans-inverse DC-DC converter was presented. The trans-inverse converter circuit was designed with Simulink/MATLAB and simulation results were obtained. FLC and PID controllers are used and the simulation results are compared. It can be seen from the results that the output voltage does not exceed much and no change in parameters is required to stabilize the system. It should be noted that it is possible to use a fuzzy logic controller for power electronics applications and also to simulate the designed circuits in Matlab / Simulink.

REFERENCES

[1] Rubaai, Ahmed, and Mohamed F. Chouikha. "Design and analysis of fuzzy controllers for DC-DC converters." Control, Communications and Signal Processing, 2004. First International Symposium on. IEEE, 2004.

[2] Dhali, Sumita, et al. "PWM-Based sliding mode controller for DC-DC boost converter." IJERA) International Journal of Engineering Research and Applications 2.1 (2012): 618-623.

[3] Jamali, Siti Hasmah. Voltage tracking of DC-DC boost converter using Gaussian Fuzzy Logic Controller. Diss. Universiti Tun Hussein Onn Malaysia, 2012

[4] Guang Feng, Wanfeng Zhang, Yan-Fei Liu. "An adaptive current mode fuzzy logic controller for dcto-dc converters".Applied Power Electronics Conference and Exposition, 2003. APEC '03. Eighteenth Annual IEEE Volume 2, 9-13 Feb. 2003 Page(s):983 - 989 vol.2

[5] M. E. Sahin, H. I Okumus, "Fuzzy Logic Controlled Synchronous Buck DC-DC Converter for Solar EnergyHydrogen Systems", INISTA 2009 Conference, 2009.

[6] I. H. Altas and A. M. Sharaf, "A Generalized Direct Approach for Designing Fuzzy Logic Controllers in Matlab/Simulink GUI Environment", International Journal of Information Technology and Intelligent Computing

[7] L. Fingersh, M. Hand, & A. Laxson. (2006). "Wind Turbine Design Cost and Scaling Model". National Renewable Energy Laboratory, pp 1-4.