T-TYPE CASCADED MULTILEVEL INVERTER

***Dilip Senta[1], Prof. N.V.Sinha[2]**
[1] *PG Student,* [2] *Associate Professor,*
[1, 2] *Department of Electrical Engineering*
[1, 2] *LD College of Engineering, Ahmedabad, Gujarat, India*

[1] *sentadilip438@gmail.com*,*[2]*nupur_vikas@yahoo.com*

Abstract: Now a day's use of non-conventional energy sources are increased. Solar energy is easily available to each part of earth. Use of that solar energy is essential to mitigate current requirement of non-conventional energy. There is only one efficient way to use that solar energy. That is first convert that solar energy into electrical energy in DC form and stored it in battery or uses it directly. But our most of load is driven by AC voltage so we have to convert that DC power into AC power. That is possible with use of inverter. There have been some studies which conclude that T-type inverter is better than NPC inverter in terms of power loss. T-type inverter also has advantage of less number of components which reduce size of inverter. For single phase operation conventional T-type inverter can be further modified and provide 5-level output with same number of switch count. Which improve THD of the output voltage Switching stress on the switch is also reduce by choosing suitable switching technique

Keywords: cost reduce, efficiency, reduce device count, multilevel invereter, SPWM, switching loss, TtypenMLI.

1. Introduction

The VSI (voltage source inverters) produce an output voltage in levels from 0 to ±Vdc. They are known as twolevel inverter. In order to produce a high quality sinusoidal output voltage waveform with less amount of ripple content, they require high switching frequency. Unfortunately, in high power applications these two level inverters have some limitations in operating at high frequency due to switching stresses. And also if there are many semiconductor devices it would be difficultly to force it to operate briefly depending to switching method and keeping dv/dt in desired interval. Also there is appeared imbalance in current and voltage distribution. In order to overcome above mentioned issues there are recently created new type of power electronic devices which inverse voltage waveform in another way to get sinusoidal form. The devices are named as multilevel inverters as its output voltage has more than two level. Multilevel inversion is a power conversion strategy in which the output voltage is obtained in staircase steps. The devices are named as multilevel inverters as its output voltage has more than two level. Multilevel inversion is a power conversion strategy in which the output voltage is obtain- ed in staircase steps. By the way total harmonic distortion (THD) and semiconductor devices voltage stress are reduced. Multilevel inverters generate an AC Voltage using small voltage steps obtained due to DC supplies or capacitor banks. The output voltage of the multilevel inverter will be improved by increasing its number of levels. There are 3 types of multi-level inverters named as diode clamped multilevel inverter, flying capacitor multilevel inverter and cascaded multilevel inverter. As the number of voltage levels m grows, the number of active switches increases according to 2*(m-l) for the cascaded H-bridge multilevel inverters.

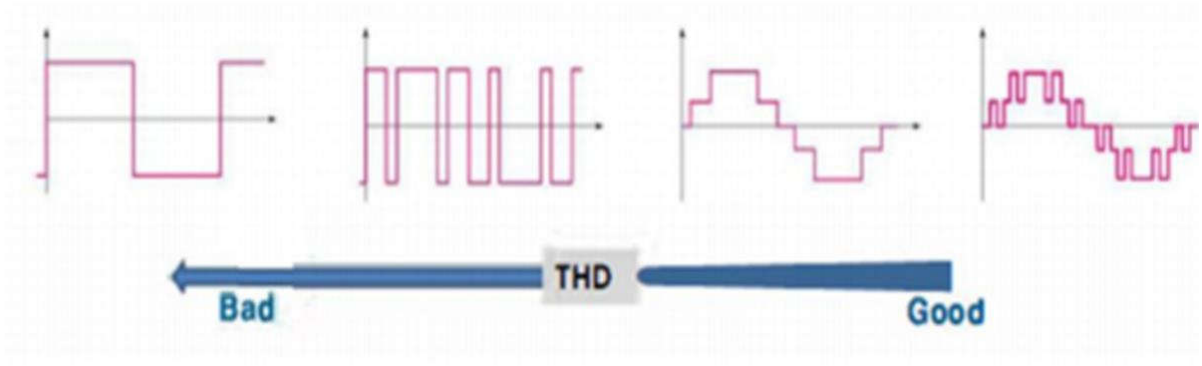

Fig. 1

Fig. 1 shows 2-level square waveform, 2-level PWM waveform, 5-level waveform and also 5- level PWM waveform. In PWM control method if PWM inverters switching frequency is increased, there would be appears a lot of harmonics. Filtering inverters from this undesired harmonics is easy. Obtaining low level harmonics containing waveforms . can be made by PWM control, but multilevel waveforms would be capable only by using multilevel inverter. When comparing multilevel inverters to 2-level inverters advantages of multilevel ones are following: Firstly, multilevel inverters can produce square wave containing PWM signals without PWM technique. Secondly, by increasing staircase levels of output voltage the voltage stress (dvIdt) across semiconductor would be decreased. Finally, EMI level is decreased. In this paper middle point clamped 5-level multilevel inverter is studied.

2. T-type 5 level inverter

Circuit diagram of a single phase 5-level T-type inverter is given in figure 2. Given circuit comprising H-bridge, one bidirectional switch and two voltage splitting capacitors. Q1, Q2, Q3 and Q4 are make H-bridge, Q5 and Q6 are work as bidirectional switch and capacitor C1 and C2 are work as voltage splitting capacitors. Switching technique for given circuit is given in table 1

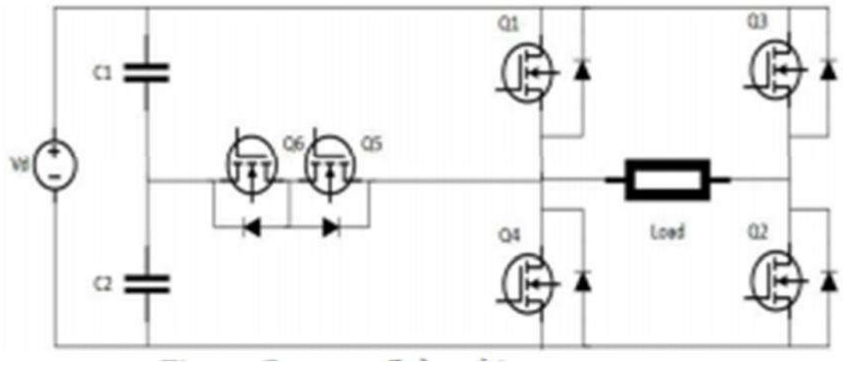

Fig-2 T-type 5 level inverter

Load voltage / switches	V_{dc}	$V_{dc}/2$	0	0	$-V_{dc}/2$	$-V_{dc}$
S_1	1	0	0	1	0	0
S_2	1	1	1	0	0	0

	0	0	0	1	1	1
	0	0	1	0	0	1
	0	1	0	0	1	0
	0	1	0	0	1	0

Table 1

3. Simulation

Simulation condition is given below.

- Modulation index ma = 0.9
- Input voltage = 110 V
- Output current = 2 A
- Carrier signal frequency is specified at 10 KHz. (For VFPWM frequency is specifiedsuch that switching loss become equal.)

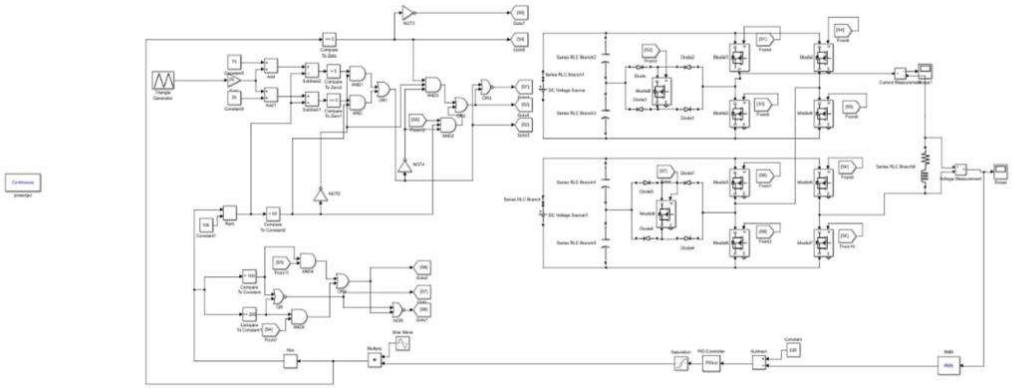

Fig – 3 Simulink model of T-type cascaded multilevel inverter

Sr. No	PWM technique	THD
1	COPWM	34.03%
2	PDPWM	33.72 %
3	PODPWM	33.68 %
6	APODPWM	33.71 %
7	PSPWM	33.74 %
8	VFPWM	33.64 %

Table 2

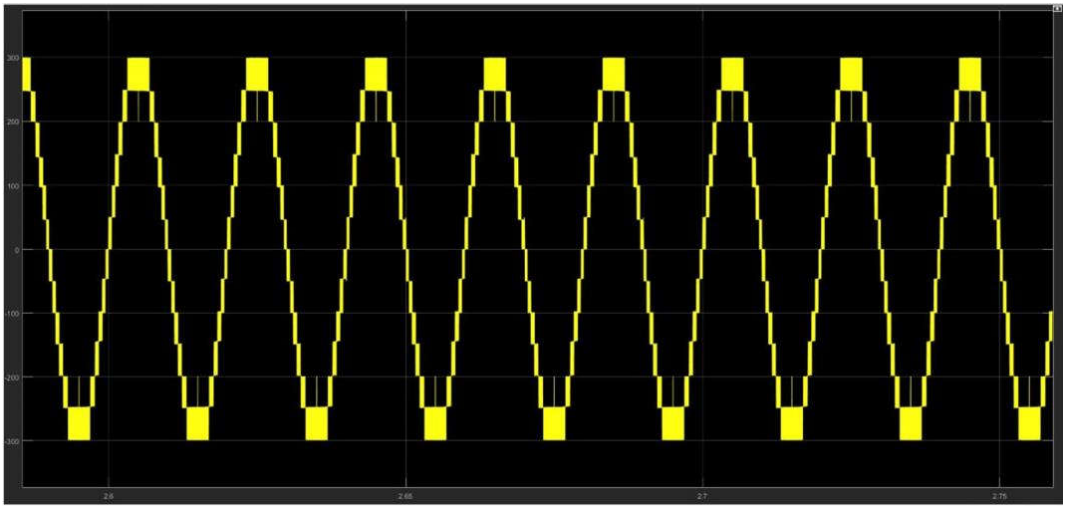

.

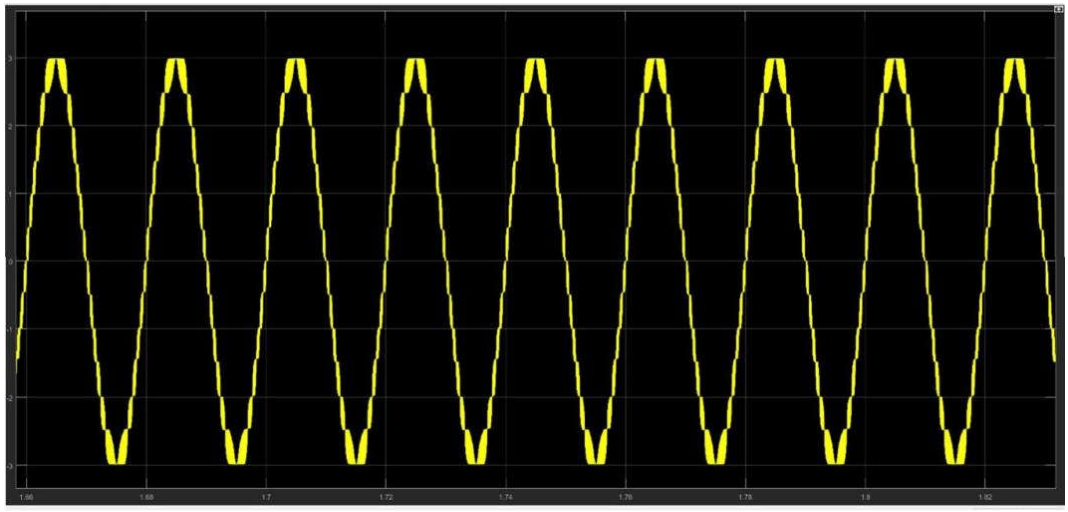

Fig 4 Output voltage and output current

8. REFERENCES

[1]. Ji-Hoon Yang, Anvar Ibadullaev and Tuan-Vu Le, Sung-Jun Park "A Study of TN PC type Single phase 5-level Inverter for Energy Storage System". 2016 IEEE Transportation Electrification Conference and Expo, Asia-Pacific (ITEC).

[2]. Narendrababu A., Naveen Yalla and Pramod Agarwal "A Modified T-typeSingle Phase Five Level Inverter withReduced Switch Voltage Stress". 2018 International Conference on Power, Instrumentation, Control and Computing (PICC).

[3]. Chirag L. Solanki, M. H. Ayalani and S. N. Gohil. "Performance of Three Phase T-Type Multilevel Inverter with Reduced Switch Count". Proceeding of 2018 IEEE International Conference on Current Trends toward Converging Technologies, Coimbatore, India.

[4]. Hyunjin Shin, Kwanghee Lee, Jaeho Choi, Seokchan Seo and Jingook Lee. "Power Loss Comparison with Different PWM Methods for 3LNPC Inverter and 3L-T Type Inverter." 2014 International Power Electronics and Application Conference and Exposition.

[5]. Chirag L. Solanki, m.h.aylayani, s.n.gohil. "Performance of Three Phase T-Type Multilevel Inverter with Reduced Switch Count" 2018 IEEE International Conference on Current Trends toward Converging Technologies, Coimbatore, India