AN OVERVIEW ON POWER QUALITY ISSUES IN WIND ENERGY SYSTEM AND ITS IMPROVEMENT USING STATCOM

[1]Mr. Bhargav Chaudhari
[1]P.G. Scholar,
Electrical Department
LD College of Engineering
Ahmedabad, Gujarat, India

[2]Mr. H.N. Raval
[2]Assistant Professor,
Electrical Department
LD College of Engineering
Ahmedabad, Gujarat, India

Abstract

The Renewable Sources such as wind power and solar power are promising energy sources to meet the increasing demand of load day by day. But, when the wind power is injected into the electric grid it affects the power quality of the grid because of varying nature of wind and hence the variable output power. The significant effect on the power quality is the change of active power and reactive power, variation of voltage, flicker, and harmonics in the system, etc. At the point of common coupling a Static Synchronous Compensator (STATCOM) with Battery Energy Storage system (BESS) is an ideal scheme to solve the problems of wind energy generating system. Battery Energy storage system is used to increase the operation mode of STATCOM from two to four modes by providing DC energy source. This paper presents STATCOM-BESS with wind energy system at point of common coupling to mitigate power quality issues.

I. INTRODUCTION

To have sustainable growth and social progress, it is necessary to meet the load demand by utilizing the renewable energy resources like wind, solar, biomass, hydro, co-generation, etc. In sustainable energy system, energy conservation and the use of renewable energy sources are the key paradigm. We know that the Electrical power is expensive to store. Hence, the power produced at the generating station must be consumed by the load. Therefore, there must be a power balance between all the generating plant and the load demand. Any imbalance would affect the frequency of the system which could lead to loss of synchronism in certain cases. The accomplishment of a power balance between the load and the generating plants is more challenging in the case of wind power generation due to its unpredictable nature especially when the generating ratio is high. A system of high wind power integration would expand the reserve capacity due to the variability of the primary resources.

A conventional power plant is expected to integrate the renewable energy like wind energy into power system is to make it possible to minimize the environmental Impact on conventional plant. The integration of wind energy into existing power system presents a technical challenges and that requires consideration of voltage regulation, stability, power quality problems. The power quality is an essential customer-focused measure and is greatly affected by the operation of a distribution and transmission network [3]. The integration of wind farms and other renewable energy conversion systems on weak distribution grids is a major issue for both the utilities planning offices and independent power plants investors, specially having in mind that the individual group/turbine capacity already surpasses 2 MW and wind farms with a capacity in the range of 150MW. One of the main problems in wind energy generation is the connection of the wind system to the grid. Injection of wind power into the grid affects the power quality of the grid and resulting in poor performance of the system. The wind energy system faces frequently fluctuating voltage due to the nature of wind and introduction of harmonics into the system. Injection of the wind power into an electric grid affects the power quality.

In normal operating system we need a control circuit for the active power production. For reducing the disturbance we use a battery storage system. This compensates the disturbance generated by wind turbine. A STATCOM has been proposed for improving the power quality. This STATCOM technically manages the power level associated with the commercial wind turbines. This system produces a proper voltage level having power quality improvements. This system provides energy saving and uninterruptible power [3]. The wind energy system is used to charge the battery as and when the wind power is available. The voltage source inverter is controlled by using the current control mode.

II. RESEARCH OBJECTIVES

•Unity power factor and power quality at point of common coupling bus.
•Real and reactive power support only from wind generator and batteries to load.
•Self-operation in case of grid failure

POWER QUALITY ISSUES

Perfect power quality means that the voltage is continuous and sinusoidal having constant figures of amplitude and frequency. Power quality can be expressed in terms of physical characteristics and properties of electricity. It is most often described in terms of voltage, frequency and interruptions [1].

1. Grid side power quality issues:
The power quality problems in the grid side that affect the WEG (Wind Electric Generator) are mainly concerned with the quality of voltage that is being supplied by the utility [1].
(a) Voltage Variations: Voltage variation has implications on both real and reactive power associated with wind farms. A decreased voltage condition increases the current through the generator, making line losses to increase. Decreasing voltage also affects the power factor as the capacitive VAR generated out of the installed capacitor decrease as voltage decreases.
(b) Frequency Variations: The variation in frequency affects the power generation in WEG to a large extent changing the aerodynamic efficiency. Frequency changes lead to imperfect tip speed ratios and reduced aerodynamic efficiencies [2]. These leads to decrease the energy capture and output power of wind turbines.
(c) Voltage transients: Large transient's voltage could be created due to switching of capacitors using mechanical switches, which are the integral part of WEG for reactive power compensation. These internally generated transients could result in damage to sensitive electronic devices of the WEG control system.
(d) Voltage unbalance: Voltage unbalance is caused due to large unbalanced loads. The unbalance in voltage causes negative sequence currents to flow in induction machines, causing overheating.
2. Wind Energy Generation side power quality issues:
Power quality issues that affect the WEG are mainly concerned with the quality of current that is being drawn or generated by the WEG's [1]
(a) Reactive power consumption: Reactive power consumption in a wind farm is mainly due to the use of induction generators for energy saving. The basic principle of Induction generators is that they consume reactive power to set up the excitation or magnetic field in order to generate real power. This reactive power consumption leads to increased transmission and distribution losses [2].
(b) Generation of current harmonics: Current harmonics are generated due to soft starting of induction generators during motoring mode. This distorts the voltage on the line and affects all the consumers connected to the line.
(c) Injection of fluctuating power: Power in wind by nature is varied and is checked by annual, monthly, daily and hourly variations. This results in generation and supply of a power that is fluctuating and leading to operational problems [1].

III. STATCOM

The static synchronous compensator, or STATCOM, is a shunt-connected power electronic converter-based FACTS device. Unlike static var compensator (SVC), the STATCOM does not employ capacitor or reactor banks to produce reactive power. The major disadvantage of a traditional STATCOM (with no energy storage) is that it has only two possible steady-state operating modes, namely, inductive (lagging) and capacitive (leading). Even though both the traditional STATCOM output voltage magnitude and phase angle can be controlled, they cannot be independently adjusted in steady state due to the lack of significant active power capability of STATCOM. Typically, the STATCOM converter voltage is maintained in phase with the PCC voltage, thus ensuring that only reactive power flows from the STATCOM to the system. However, owing to some losses in the coupling transformer and converter, the converter voltage is generally maintained with a small phase shift with the PCC voltage. Thus, practically, a small amount of real power flows through the system from PCC to DC bus, to compensate for the losses. However, the real power capability of the STATCOM is very limited due to the absence of any energy storage the DC bus. Compared with the traditional STATCOM, the STATCOM + BESS offer more flexibility.

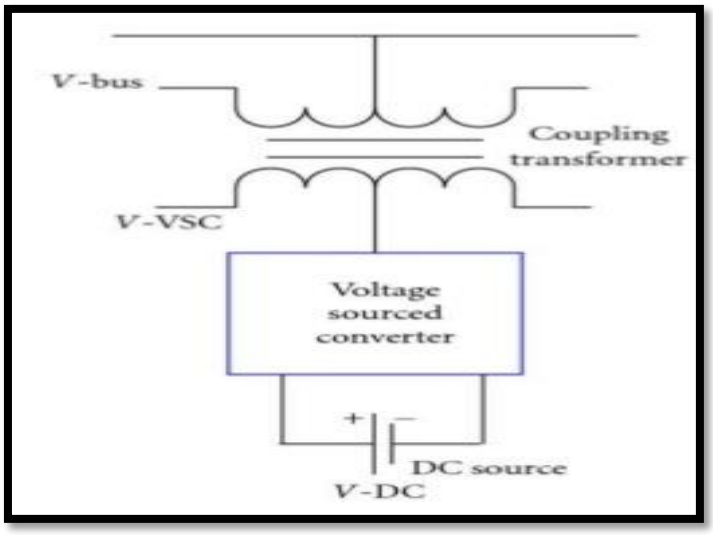

Fig.1 Single line diagram of STATCOM [5]

In case of STATCOM, the number of steady-state operating modes is extended to various situations such as inductive mode with DC charge and DC discharge, capacitive mode with DC charge and discharge. Thus, in steady state, the STATCOM + BESS have four operating modes and can operate at every point in the steady-state characteristic circle. In addition, depending on the energy output of the battery or other ESS, the discharge/charge profile is generally sufficient to provide enough energy to stabilize the power regulation in the system and maintain operation until other long-term energy sources are brought into operation.

IV. SIMULATION AND RESULT DISCUSSION

The proposed system in this dissertation work contains a wind generating system combined with the transmission line and the source for proper grid integration. The 3-phase system proposed is integrated with the load and the C.B for protection purpose also. The output voltage, current results shown in the below sections.

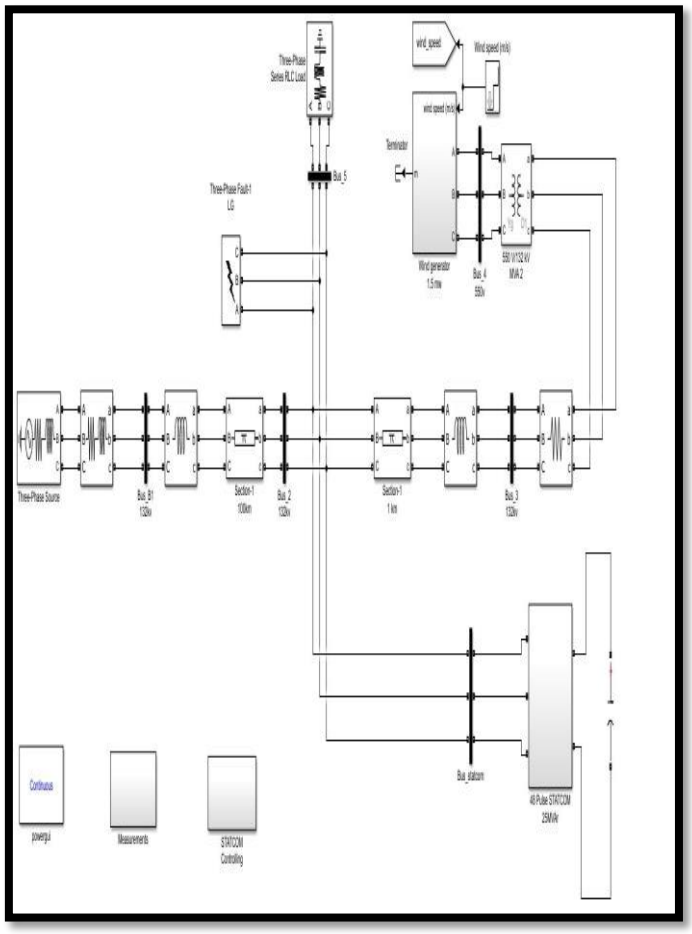

Fig 2- Main system of Wind Power plant with STATCOM

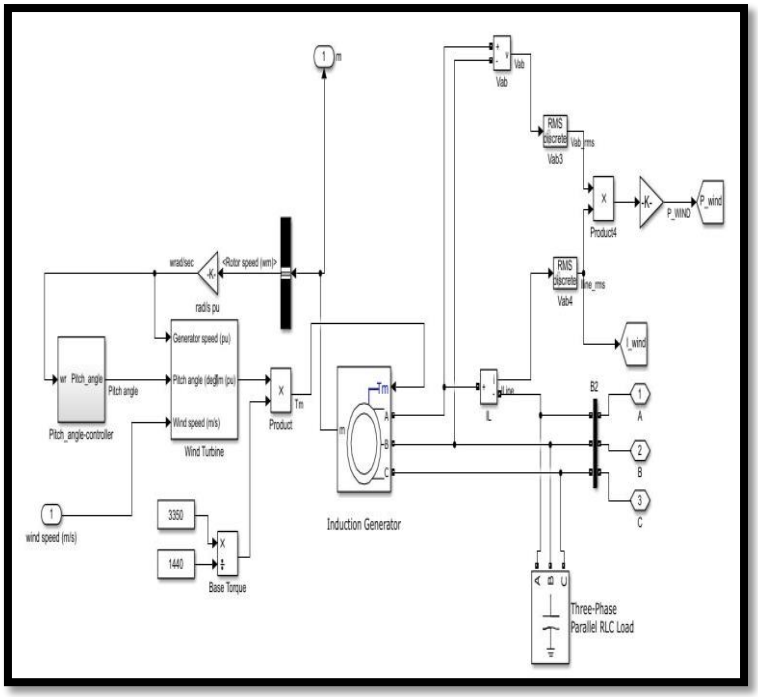

Fig 3 Wind Power Plant Subsystem

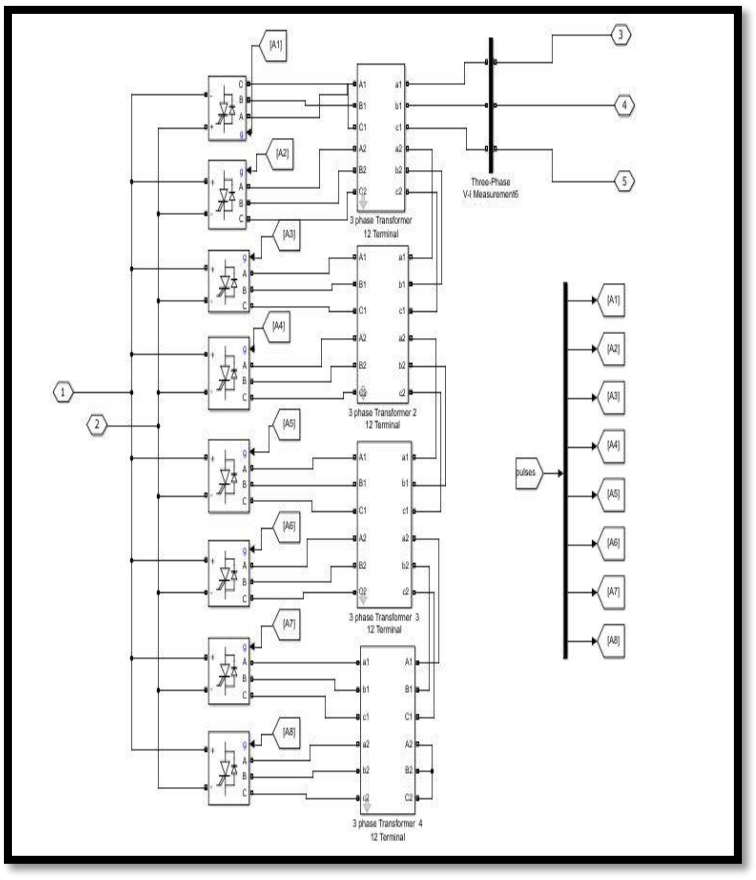

Fig 4- STATCOM Converter subsystem

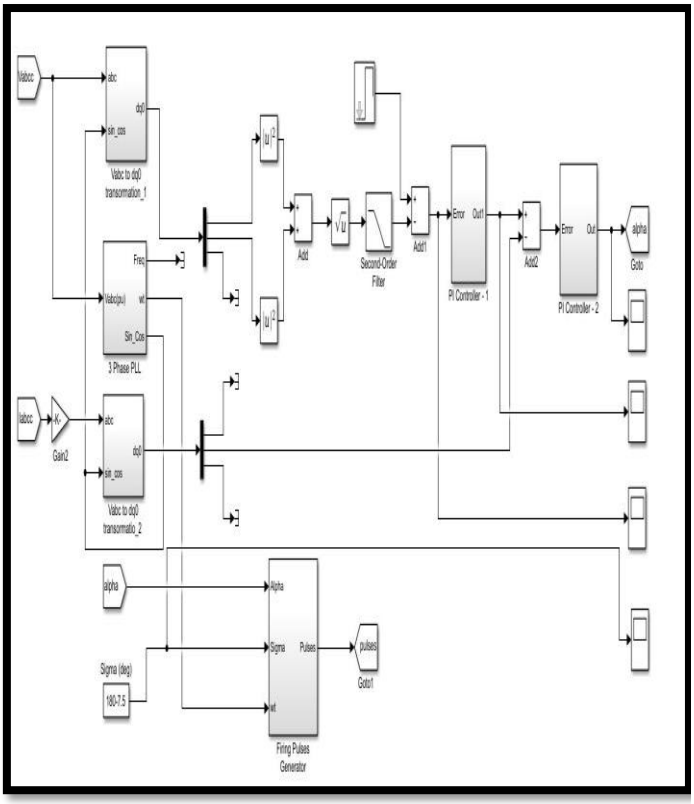

Fig 5- STATCOM controller subsystem

Simulation Results

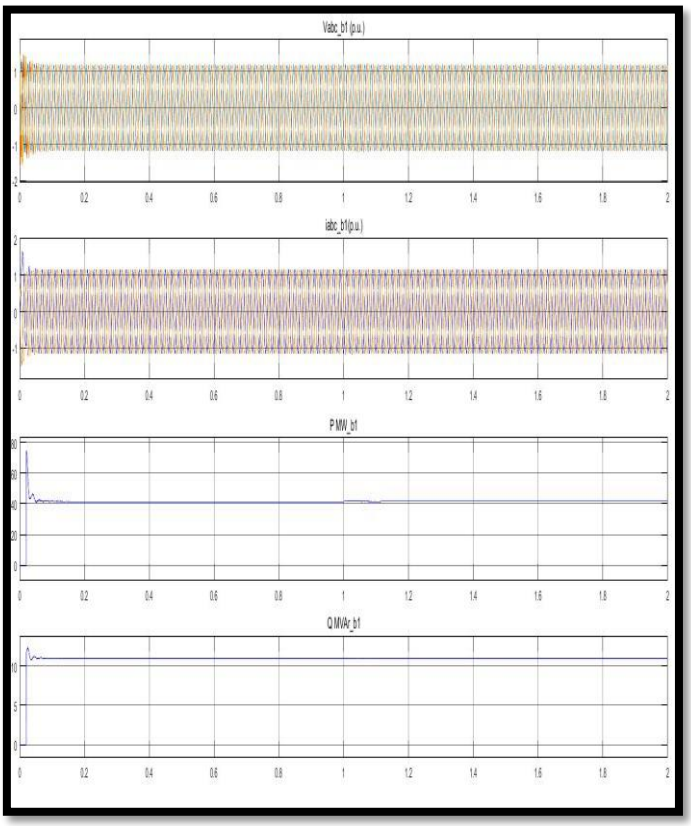

Fig 6- Bus-1 Output Parameters

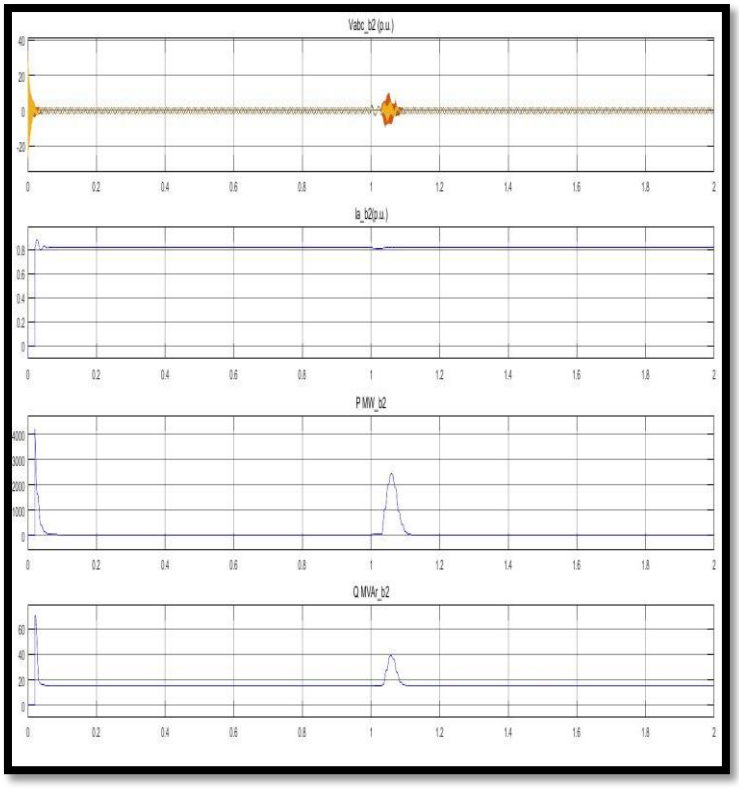

Fig 7 - Bus-2 output Parameters

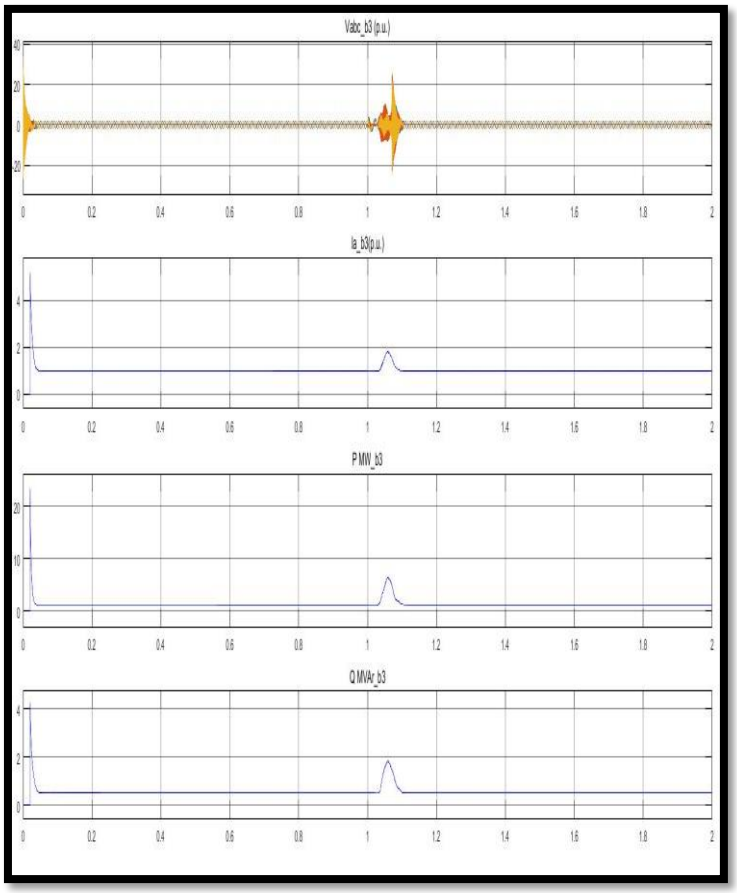

Fig 8- Bus-3 output Parameters

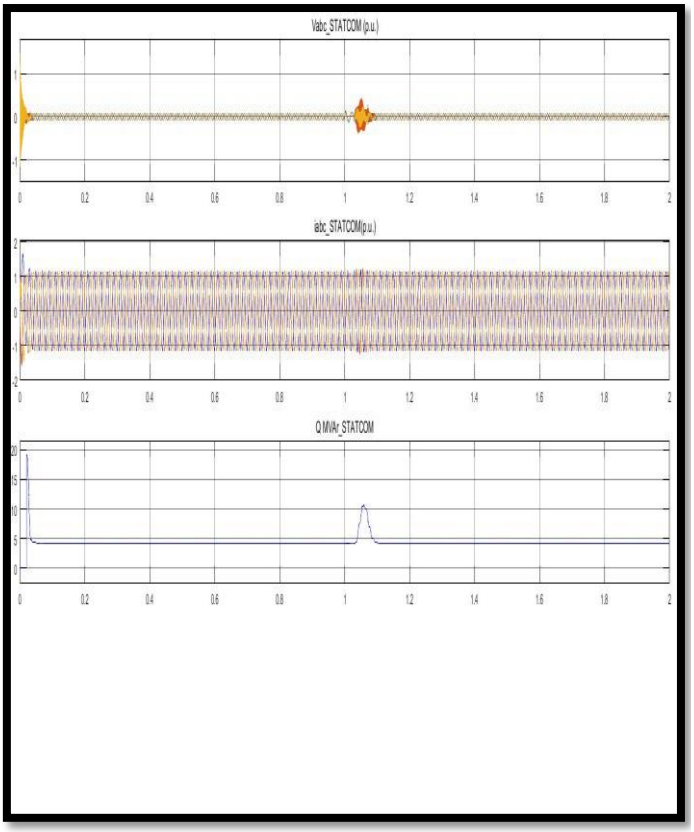

Fig 9- STATCOM controller output voltage and current waveform with Reactive power compensation

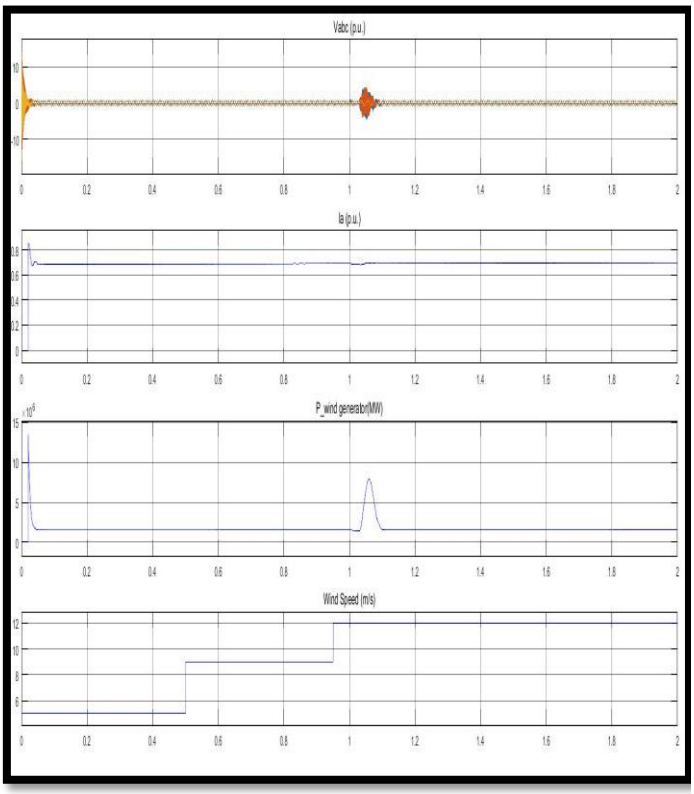

Fig 10- Wind power plant output parameters

STATCOM Model

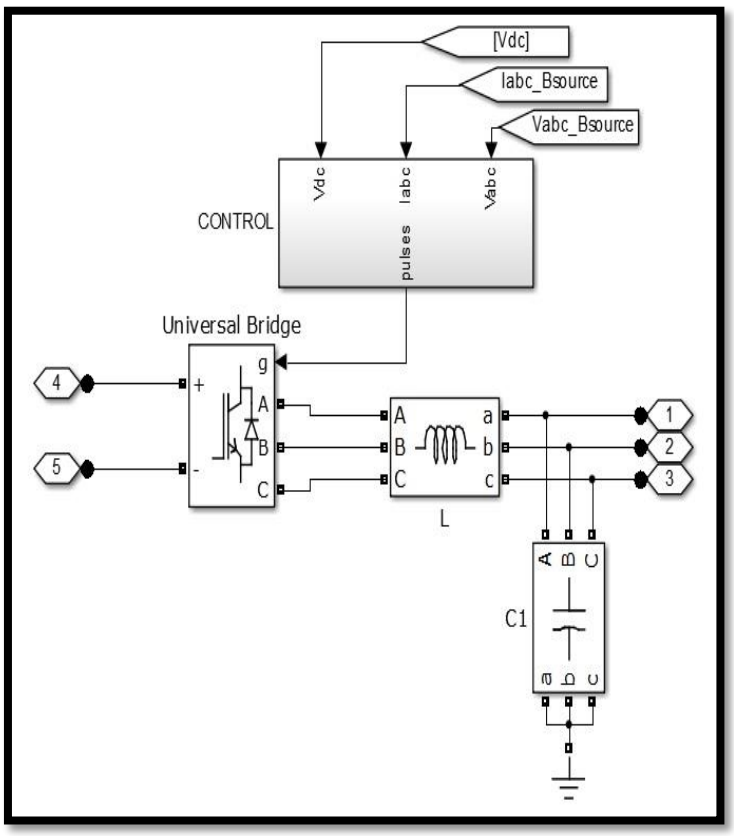

Fig. 11 STATCOM Converter with Controller

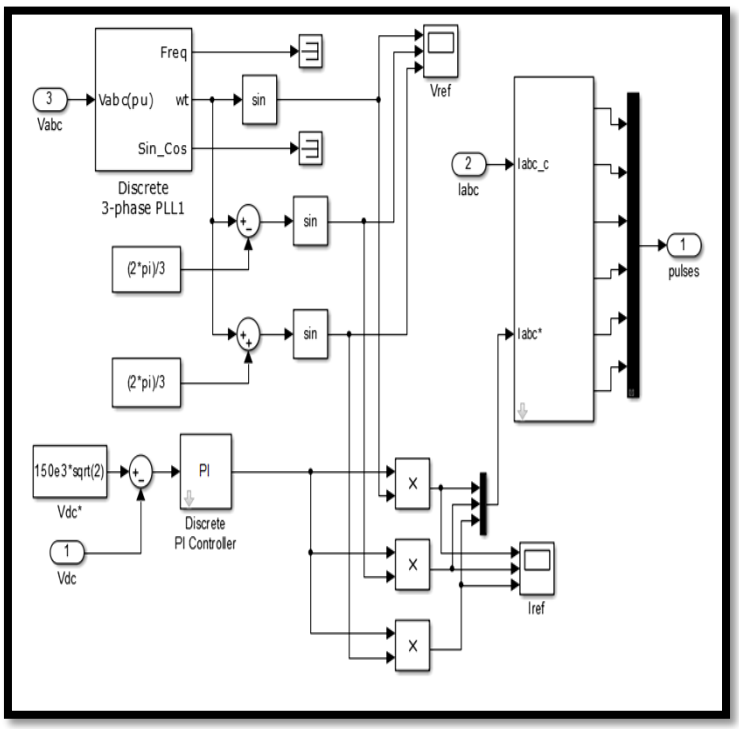

Fig.12 Control System of STATCOM with PI controller and Hysteresis Band Control

The triggering pulse for STATCOM is generated through hysteresis band control type converter. Here the pulse generated is controlled between two hysteresis band limit. First of the entire error signal between actual dc voltage and reference voltage is generated through PI controller which actually produce numeric data of error signal. Now this numeric data is multiply with the signal generated through phase lock loop (PLL) which is phase shifted by 120º of each other. This 3 phase signal is now multiplexed and given to hysteresis pulse generator.

Hysteresis controller

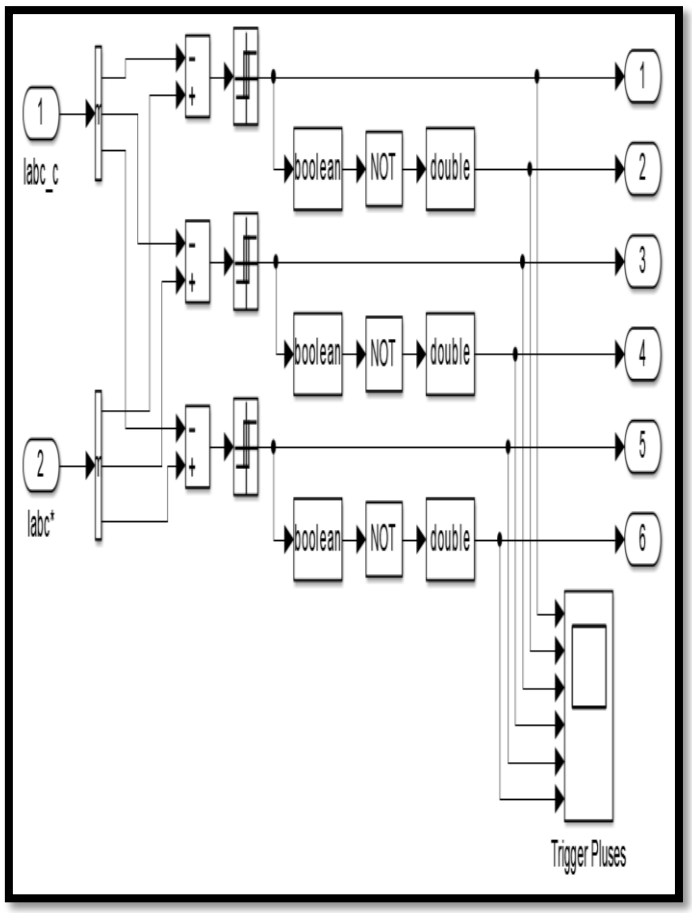

Fig. 13 Hysteresis band controller

The hysteresis controller actually produces the output signal in the reference of two current one is measured system current and another is reference current. The output of this two current produce error signal which is then given to hysteresis band and it generates the control pulse signal. Here to invert the signal logical operator NOT is used. As it works in Boolean region the signal is firstly converted into Boolean function and then it inverted through NOT gate and again it converted back into real world signal through double. This six pulse output drives three phase voltage source inverter inside STATCOM.

Simulation Results

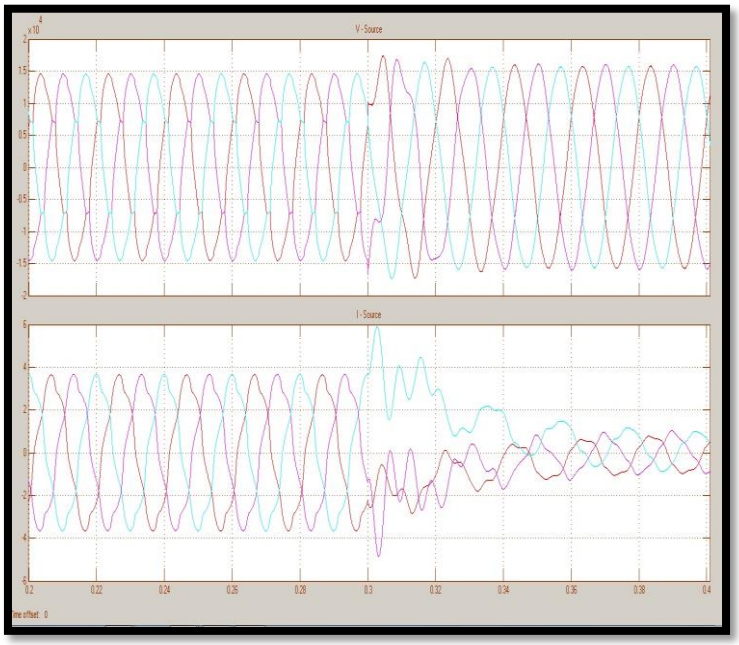

Fig.14 Source side voltage and current

Here the voltage and current get distorted during first 0.3sec of time due to nonlinear load and the STATCOM and wind generation system is isolated. As at 0.3sec the breaker is operated and the system get connected to the existing system the STATCOM removes the voltage harmonics and makes it smooth sinusoidal.

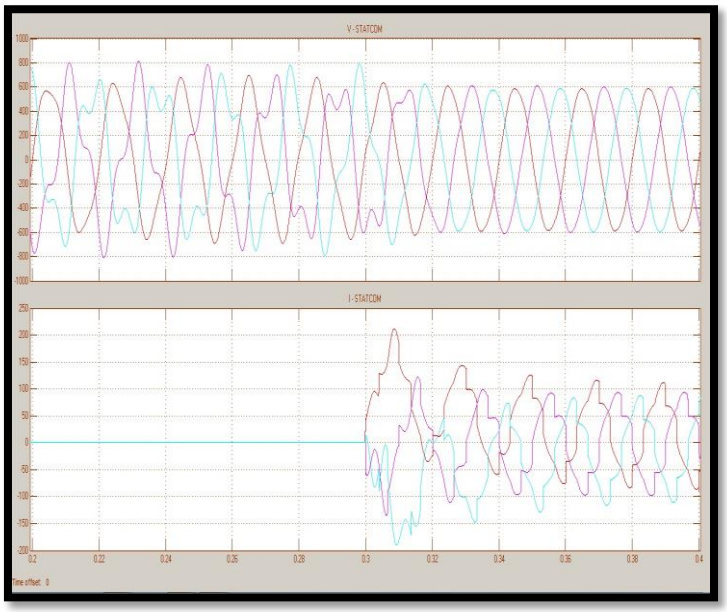

Fig. 15 STATCOM injected voltage and Current

It shows the voltage and current injection into the system by STATCOM. This reduces the voltage harmonics and makes the supply smooth sinusoidal.

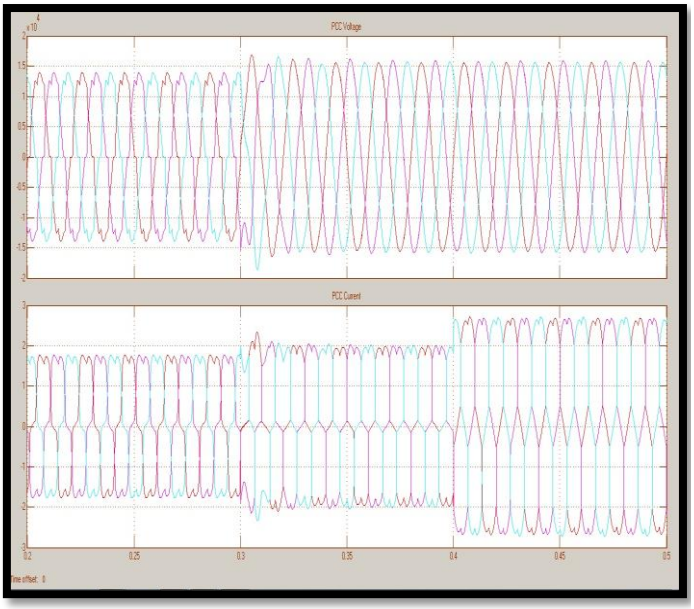

Fig.16 Voltage and Current at point of common coupling (PCC)

Our aim is that to make PCC voltage constant and harmonics free even though the wind power generation changes. Here we can see that at 0.3sec the wind power is injected to the system but the system voltage is unchanged and the harmonics in the supply voltage is also reduced.

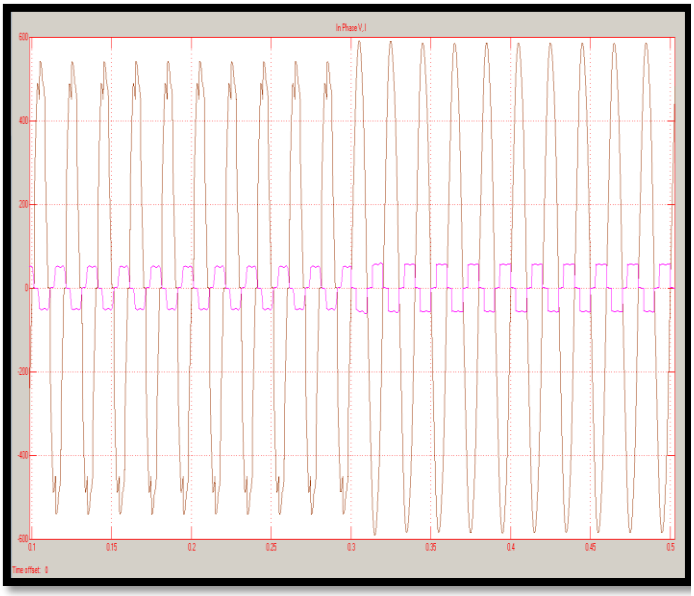

Fig 17- Phase difference between voltage and current

During discontinuity of wind power and STATCOM the power factor is lagging due to nonlinear load. But after incorporation of STATCOM the power factor come closer to unity.

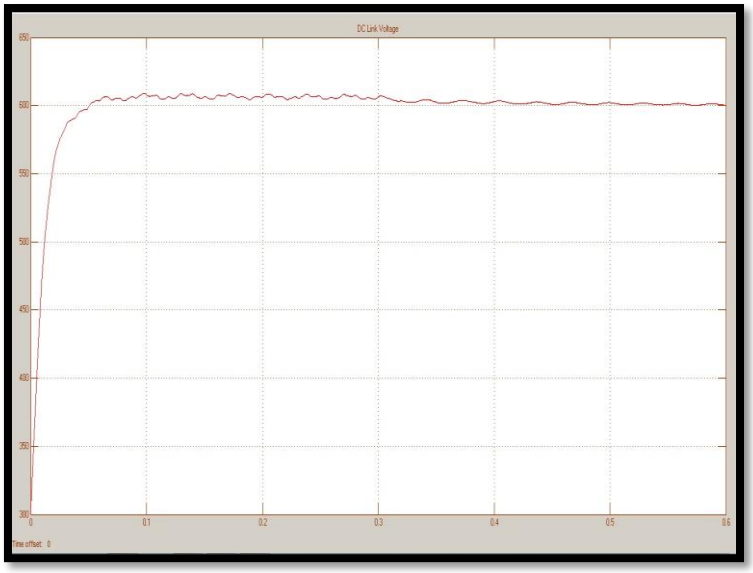

Fig. 18 DC link Voltage

Here we can clearly observe that the dc link voltage have some fluctuation during STATCOM is not in operation. After 0.3sec the STATCOM starts injecting power into system and dc link voltage get stabilized and the fluctuation also reduces. This dc link voltage makes the capacitor voltage constant so that the power flow can be smooth.

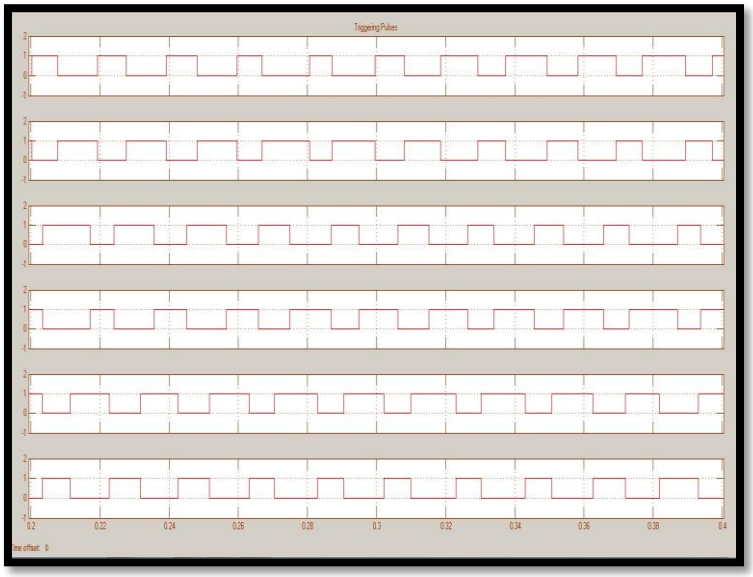

Fig .19 Triggering pulse for STATCOM

Here it shows the triggering pulse is shifted with time with each other. When one signal is on another is off for same duration of time.

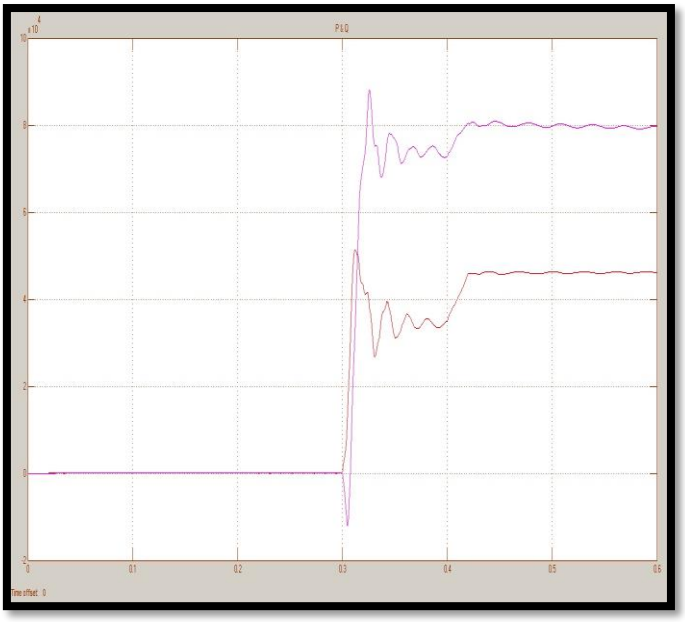

Fig.20-Active and reactive power from STATCOM

V. CONCLUSION

Various parts of this project has been showed and discussed with precision and proper details. Based on that we can conclude that the wind generation power integration with existing grid can be possible by using STATCOM converter and the power supply provide by this converter reduces the system harmonics and improve the power quality. Also it shows that change in load has significant effect on power system voltage and current. Change in load can produce some of power quality problems which is undesirable but it is due to distribution network and totally depending on power consumers. So the harmonics production due to load change can't be avoid but it can reduce by using prescribed system. Also one major part of this thesis work is excess power of wind generation can store using high capacity batteries so that the power exchange with grid can be constant and the energy can be utilize during pike load time

REFERENCES

(1) Mohammad Ali Tofigh and NasrudinAbd Rahim, "Voltage Regulation of Grid Connected Wind Farm Using STATCOM", IEEE SYSTEMS JOURNAL, VOL. 4, NO. 3.

(2) Sharad W. Mohod and Mohan V. Aware, "A STATCOM-Control Scheme for Grid Connected Wind Energy System for Power Quality Improvement", IEEE SYSTEMS JOURNAL, VOL. 4, NO. 3, SEPTEMBER 2010.

(3) V. Amarnath Reddy, P. Harshavardhan Reddy, M. Sudheerbabu, "Power Quality Improvement in Wind Energy system by using STATCOM on Integration to the Grid", Vol. 2, Issue. 5, Sep.-Oct. 2012 pp-3637-3640 ISSN: 2249-6645, International Journal of Modern Engineering Research (IJMER).

(4) ChandulalTejavoth, M. Trishulapani, V.K.R.MohanRao, Y.Rambabu, "Power Quality Improvement for Grid Connected Wind Energy System using STATCOM-Control Scheme", IOSR Journal of Engineering (IOSRJEN) e-ISSN: 2250-3021, Vol. 3, Issue 7 (July. 2013).

(5) Sharad W. Mohod and Mohan V. Aware, "Power quality issues and its improvement in wind energy generation interface to grid system", MIT International Journal of Electrical and Instrumentation Engineering, Vol-1, No-2, August-2011.

(6) Deshveer1, Amit Bhardwaj2 "Simulation and Modeling of STATCOM and WINDFARM in Transmission Line Using MATLAB and Analysis of Bus Voltage", International Journal of All Research Education and Scientific Methods (IJARESM).

(7) Chad Abbey, Kai Strunz, and G´ezaJo´os "A Knowledge Based Approach for Control of Two-Level Energy Storage for Wind Energy Systems", IEEE TRANSACTIONS ON ENERGY CONVERSION, VOL. 24, NO. 2, JUNE 2009.

(8) M.Laouera, A.Mekkaouia, M.Younes, "STATCOM and Capacitor Banks in a fixed-speed wind farm", Science Direct, 1876-6102, 2014 Elsevier Ltd.

(9)Christian Wessels, Nils Hoffmann, Marta Molinas and Friedrich Wilhelm Fuchs, "STATCOM Control at Wind Farms With Fixed-Speed Induction Generators under Asymmetrical Grid Faults", IEEE TRANSACTIONS ON INDUSTRIAL ELECTRONICS, VOL. 60, NO. 7, JULY 2013.

(10) Sarika D. Patil,"Improvement of Power Quality Considering Voltage Stability in Grid Connected System by FACTS Devices", Dept. of Electrical Engineering, Rajiv Gandhi College of Engineering & Research, Nagpur, India.