SIMULATION OF ACTIVE POWER CONTROL WITH IMPROVED P&O METHOD FOR WIND- PV-BATTERY BASED STANDALONE GENERATION SYSTEM

***Rahulkumar Suthar[1] & Prof. J.B. Modi[2]**
[1]M.E Scholar, [2]Associate Professor
[1,2]Department of Electrical Engineering
[1,2]L.D. College of Engineering, Ahmedabad, Gujarat, India.
[1]panchalr304@gmail.com, [2]jbmodi72@gmail.com*

Abstract: *This paper presents study of hybrid power system. A solar-wind hybrid system is a reliable alternative energy source because it uses solar energy combined with wind energy to create a stand-alone energy source that is both dependable and consistent. Solar power or wind power alone can fluctuate, when used together they provide a reliable source of energy. In this paper the modelling and simulation of active power control (APC) with anti-windup PI controller (AWPI) and improved perturbation and observation (P&O) method with sliding mode control (SMC), are investigated to get high level of performance with reduced number of sensors for a stable operation of a wind-PV-battery based hybrid standalone power generation system (HSPGS). The SMC approach with boundary layer, is used to have an optimum trajectory of the system as sliding manifold of surfaces, under variable operating conditions of many power converters operated in simultaneously. The effectiveness and robustness of HSPGS and their respective control strategies are validated by simulation using Matlab-Simulink.*

Keywords: **Perturb and observe, Standalone, Solar Module.**

1. Introduction

Rapid depletion of fossil fuel resources on a worldwide basis has necessitated an urgent search for alternative energy sources to cater to the present days' demand. . Therefore, it is imperative to find alternative energy sources to cover the continuously increasing demand of energy while minimise the negative environmental impacts Recent research and development of alternative energy sources have shown excellent potential as a form of contribution to conventional power generation systems. There is a huge potential for utilizing renewable energy sources, for example solar energy, wind energy, or micro-hydropower to provide a quality power supply to remote areas. The abundant energy available in nature can be harnessed and converted to electricity in a sustainable way to supply the necessary power demand and thus to elevate the living standards of the people without access to the electricity grid.

The advantages of using renewable energy sources for generating power in remote islands are obvious such as the cost of transported fuel are often prohibitive fossil fuel and that there is increasing concern on the issues of climate change and global warming. The electric power generation system, which consists of renewable energy and fossil fuel generators together with an energy storage system and power conditioning system, is known as a hybrid power system. A hybrid power system has the ability to provide 24 hour grid quality electricity to the load. This system offers a better efficiency, flexibility of planning and environmental benefits compared to the diesel generator stand-alone

system. The maintenance costs of the diesel generator can be decreased as a consequence of improving the efficiency of operation and reducing the operational time which also means less fuel usage.

The system also gives the opportunity for expanding its capacity in order to cope with the increasing demand in the future. Combining the renewable energy generation with conventional diesel power generation will enable the power generated from a renewable energy sources to be more reliable, affordable and used more efficiently.

This Paper focuses on the combination of solar wind systems for sustainable power generation. The solar energy also varies with the hourly, daily and seasonal variation of solar irradiation. The wind turbine output power varies with the wind speed at different conditions. However, a drawback, common to solar irradiation and wind speed options, is their unpredictable nature and dependence on weather and climatic changes, and the variations of solar and wind energy may not match with the time distribution of load demand. This shortcoming not only affects the system's energy performance, but also results in batteries being discarded too early. Generally, the independent use of both energy resources may result in considerable over-sizing, which in turn makes the design costly. It is prudent that neither a stand-alone solar energy system nor a wind energy system can provide a continuous power supply due to seasonal and periodical variations for stand-alone systems. Thus wind system is hybridized with solar system to maximize use of renewable energy generation system while minimizing the total system cost**.**

- Classification of Energy Resources:-

  Energy resources are classified into non-renewable and renewable resources

(1) Non-renewable Energy Resources:-

Non-renewable energy resources are the ones which are limited and become extinct with the time, such as oil, coal and coal derivatives, natural gas, wood and radioactive material (uranium, plutonium) and also produces a lot of harmful waste.

(2) Renewable Energy Resources:-

Renewable energy resources are the ones that are continuously available and renewing itself with the time. Industrialization and ever increasing world population need the use of renewable energy resources. Solar energy, wind energy, biomass, tidal energy, wave energy, geothermal power are popular.

- Solar power

Solar panel is a device that converts solar energy directly into electrical energy. Solar panel is made up off photovoltaic cells which are made by semiconductor. When sun beam is fall on the PV cell they absorb the heat and electron are emitted from the atom. Due to the movement of the electron current is generated. With this process solar panel, convert solar energy directly into the electric energy. Photovoltaic is known as the process between radiation absorbed and the electricity induced. Solar power is converted into the electric power by a common principle called photoelectric effect.

The basic unit of a photovoltaic power system is the PV cell, where cells may be grouped to form panels or modules. The panels then can be grouped to form large photovoltaic array that connected in series or parallel. Panels connected in parallel increase the current and connected in series provide a greater output voltage.



Fig. 1. PV Cell, PV Module, PV Array [3]

The energy generated by the sun radiation is calculated by the formulae:

$P = A \cdot x^2 + B \cdot x + C$ (in Watts) (1)

Where,
X = Solar radiation
P= Power Formation
And A, B and C are constant
By the above formula, we can calculate the amount of power generated by the Sun.

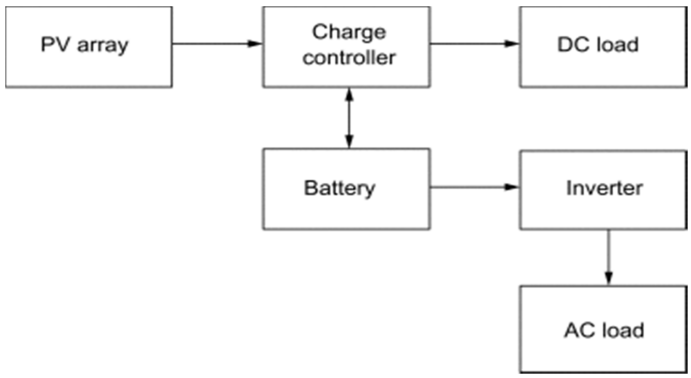

Fig. 2. Basic PV System [3]

Storage batteries as shown in fig. 2 provide the backup power during cloudy weather to store the excess power or some portion of power from the solar arrays. This solar power generating system is used for domestic power consumption, meteorological stations and entertainment places like theatre, hotel, restaurant etc.

- Wind Power

The wind energy is a renewable source of energy. Wind power involves converting wind energy into electricity by using wind turbines. A wind turbine is a machine that converts the kinetic energy in wind into mechanical energy. The energy production by wind turbines depends on the wind velocity acting on the turbine. Wind power is able to feed both energy production and demand in the rural areas.

The main drawback of this system is that as the wind speed or velocity is not constant with respect to time i.e. fluctuating, hence the electric power thus obtained is also does not have a fixed value i.e. varying nature. Thus, it is better to feed the wind electricity to the battery or any power storage device, which supply the load consecutively, rather than directly supply to the load as shown

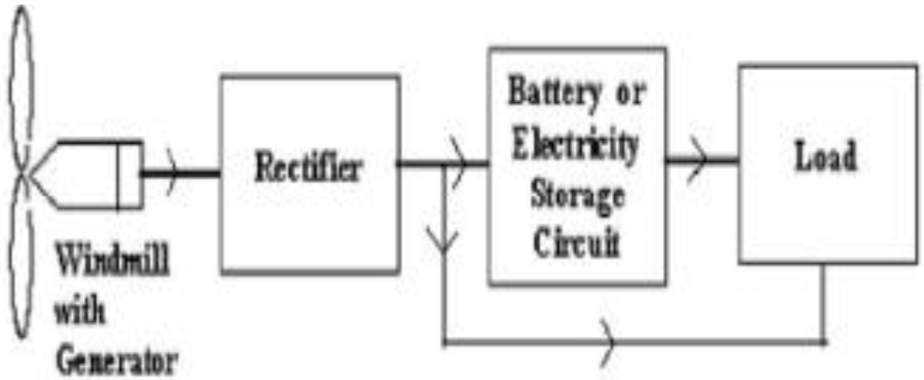

Fig. 3. Basic Wind Power System [2]

The power output of a turbine is a function of the cube of the wind speed, so as wind speed increases, power output increases dramatically. Areas where winds are stronger and more constant, such as offshore and high altitude sites are preferred locations for wind farms. We cannot convert all the wind energy into electricity: we can convert only 59%, according to Betz limit. The output equation for a wind generator is given by:

$$P = (1/2) \times \rho \times A \times v^3 \text{ (in Watts)} \qquad (2)$$

Where, A=area perpendicular to the direction of flow (in m^2), v=wind velocity (ms^{-1}),
ρ =density of air (in Kgm^{-3})
and P=power generation.

2. Control strategies

P&O algorithm:-

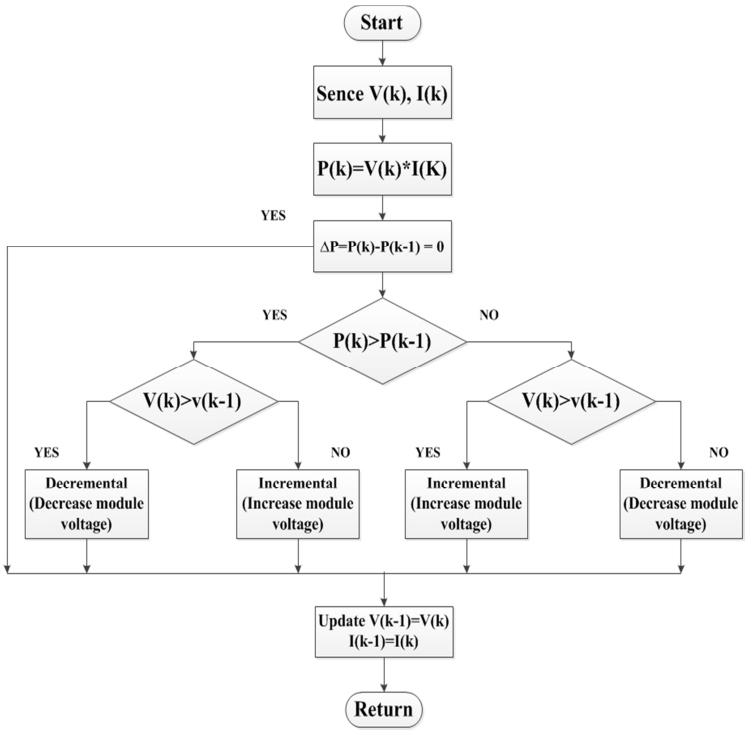

Fig. 4. P&O algorithm [4]

P&O method is used for tracking the MPP. In this technique, a minor perturbation is introduced to, cause the power variation of the PV module. The PV output power is periodically measured and compared with the previous power. If the output power increases, the same process is continued otherwise perturbation is reversed. In this algorithm perturbation is provided to the PV module or the array voltage. The PV module voltage is increased or decreased to check whether the power is increased or decreased. When an increase in voltage leads to an increase in power, this means the operating point of the PV module is on the left of the MPP. Hence further perturbation is required towards the right to reach MPP. Conversely, if an increase in voltage leads to a decrease in power, this means the operating point of the PV module is on the right of the MPP and hence further perturbation towards the left is required to reach MPP. The flow chart of the adopted P&O algorithm for the charge controller is given in Fig. 4 When the MPPT charge controller is connected between the PV module and battery, it measures the PV and battery voltages. After measuring the battery voltage, it determines whether the battery is fully charged or not. If the battery is fully charged it stops charging to prevent battery over charging. If the battery is not fully charged, it starts charging by activating the DC/DC converter. The microcontroller will then calculate the existing power P_{new} at the output by measuring the voltage and current, and compare this calculated power to the previous measured power P_{old}. If P_{new} is greater than P_{old}, the PWM duty cycle is increased to extract maximum power from the PV panel. If P_{new} is less than P_{old}, the duty cycle is reduced to ensure the system to move back to the previous maximum power. This MPPT algorithm is simple, easy to implement, and low cost with high accuracy.

3. system configurations

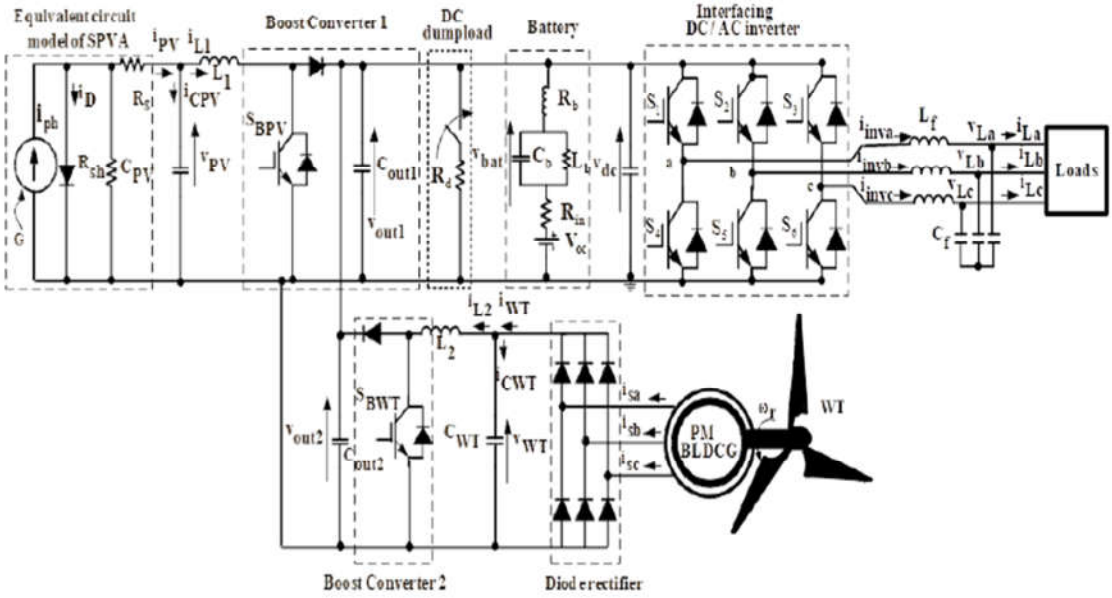

Fig. 5. HSPGS configuration under study [1]

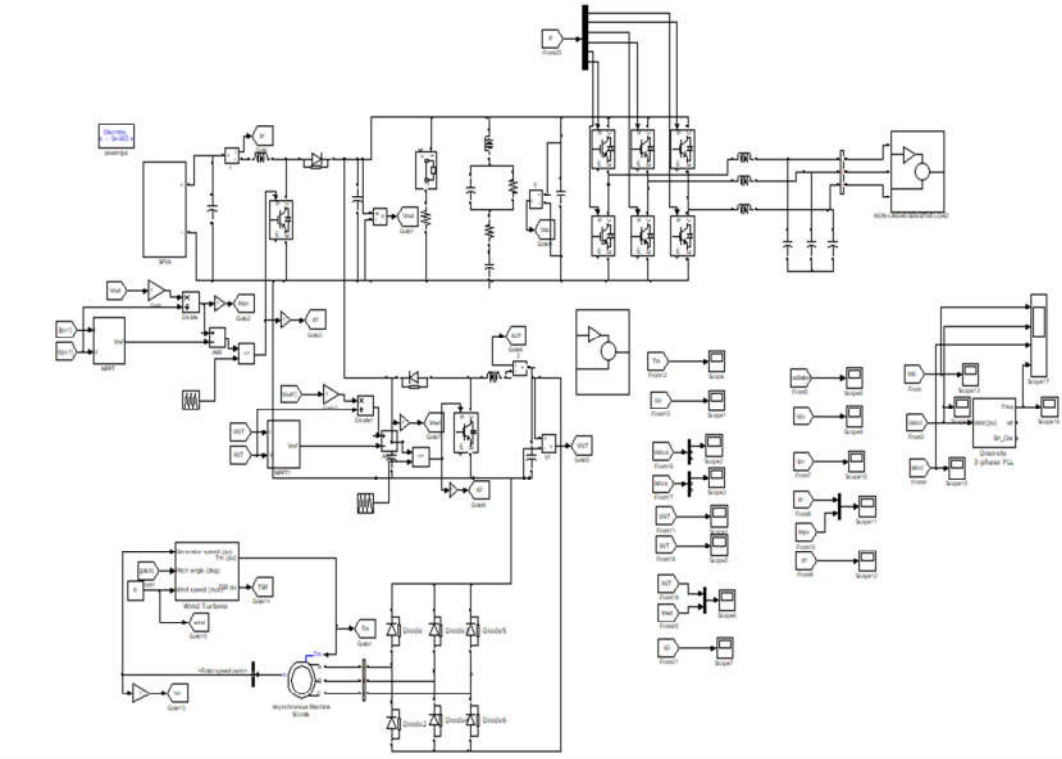

Fig. 6. HSPGS Matlab Model

4. Matlab simulation

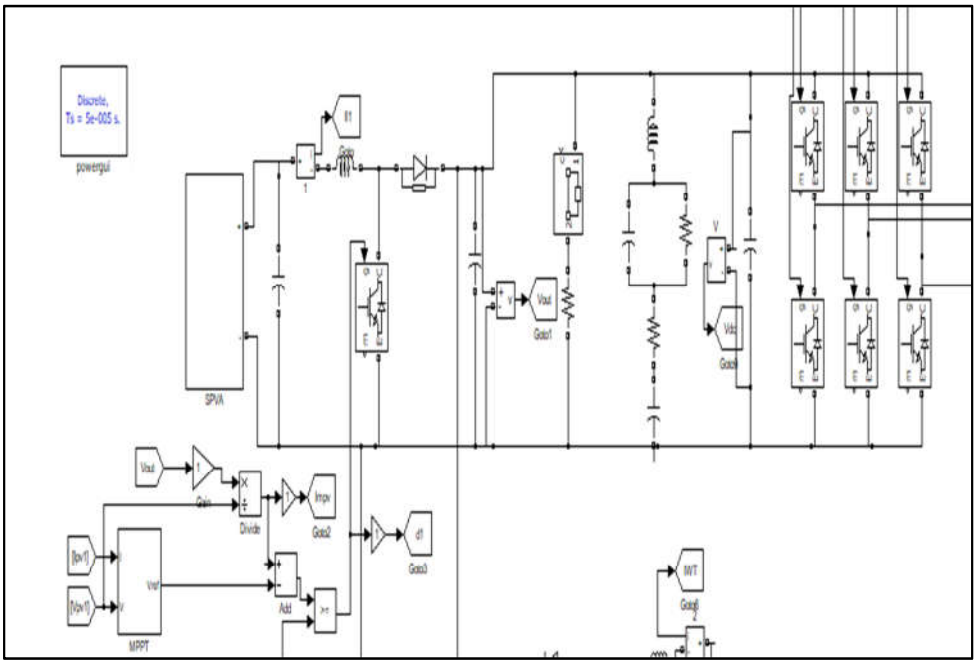

Fig. 7. Solar PV system with MPPT Control

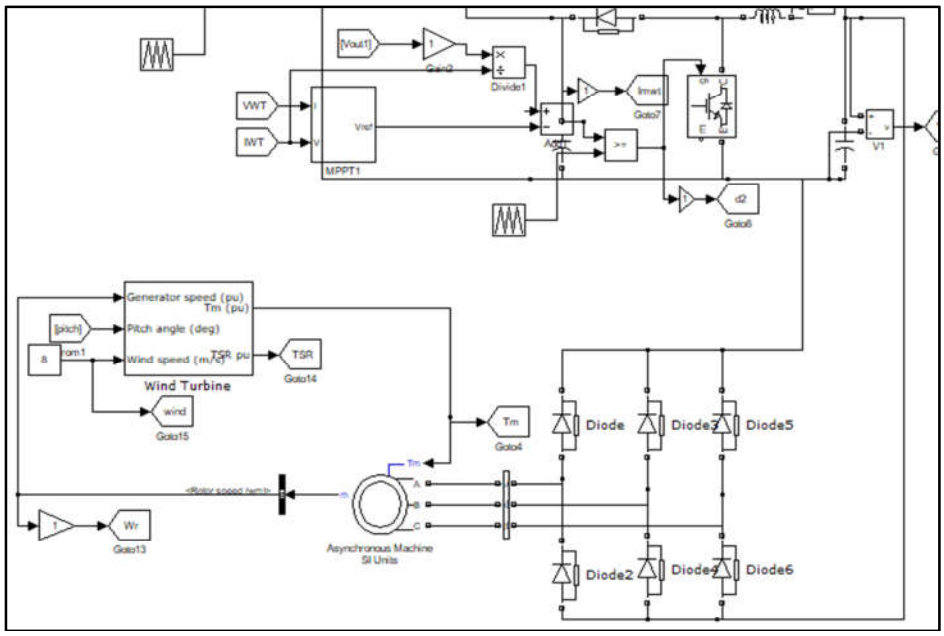

Fig. 8. Wind Power system with MPPT Control

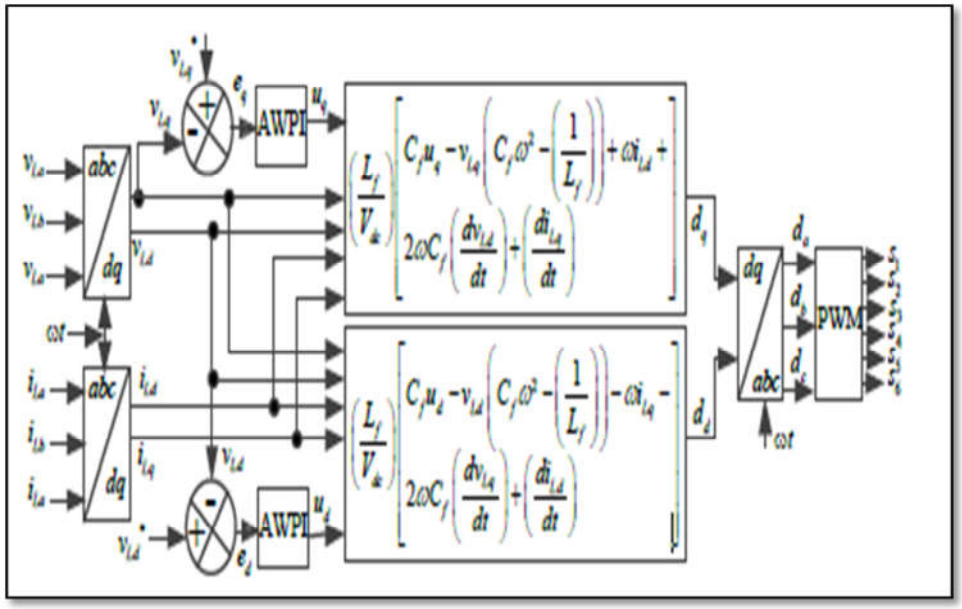

Fig. 9. APC based AWPI controller for DC-AC interfacing inverter [1]

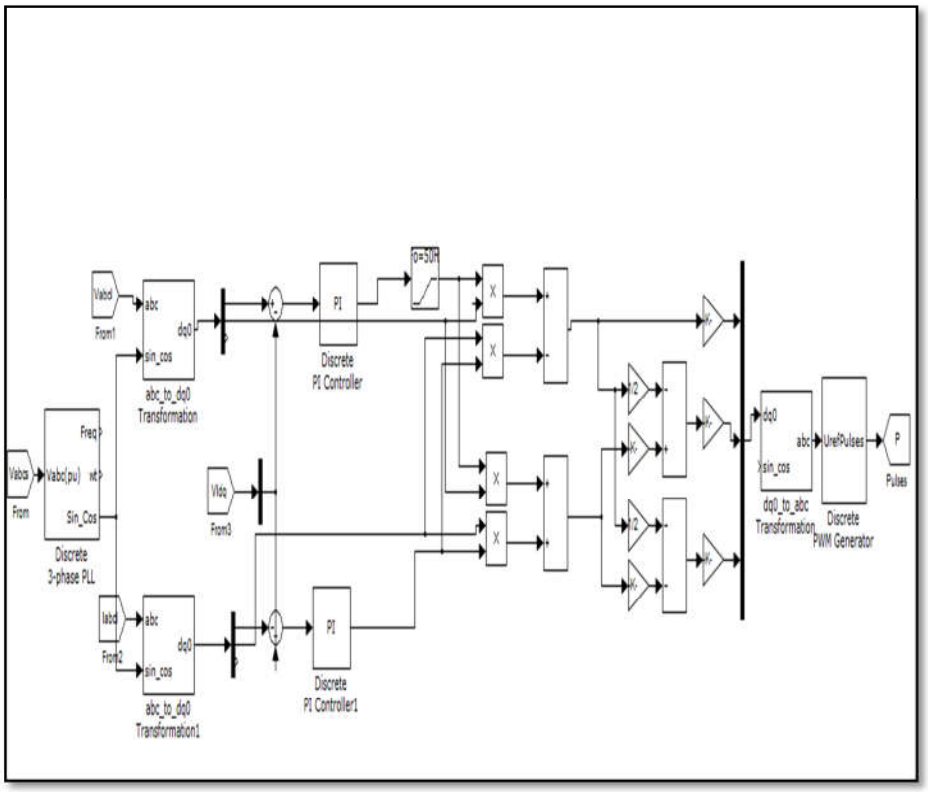

Fig. 10. APC based AWPI controller for DC-AC interfacing inverter

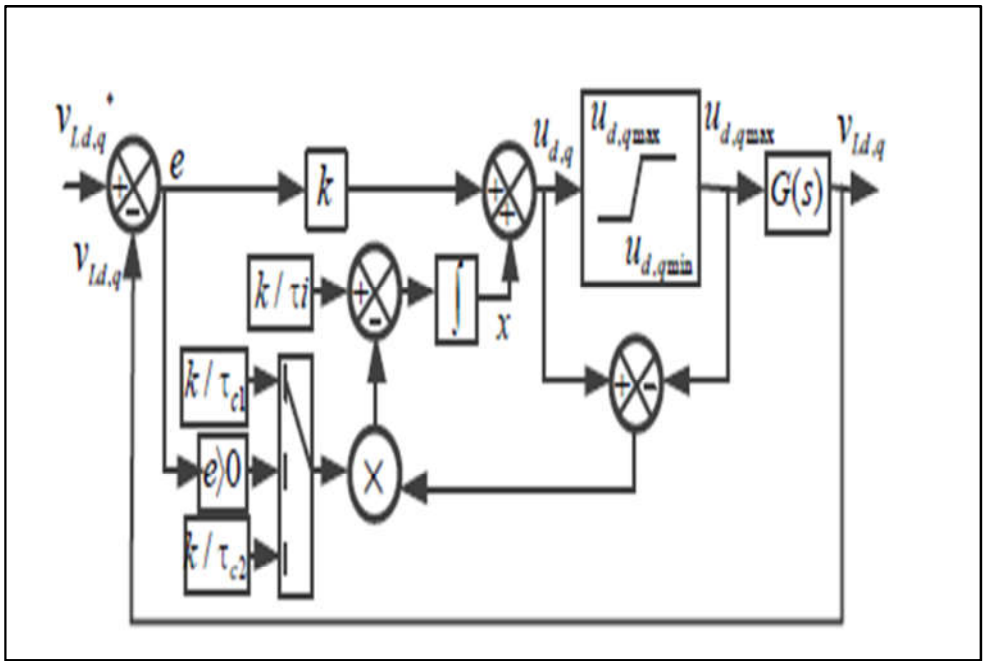

Fig. 11. Block diagram of the AWPI controller with feedback path control for d-axis and q-axis [1]

5. Simulation results

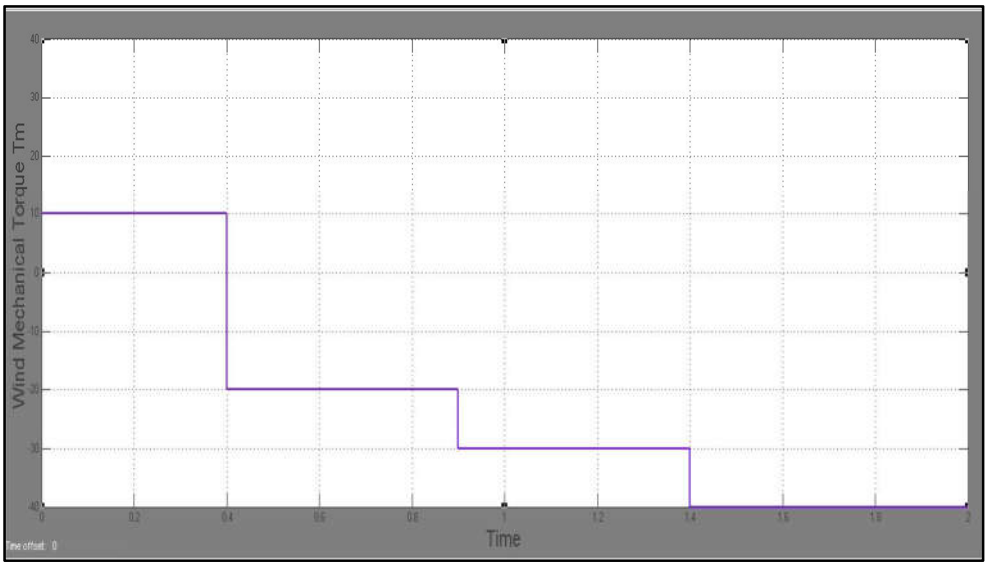

Fig. 12. Wind Turbine Mechanical Torque (Tm) in NM

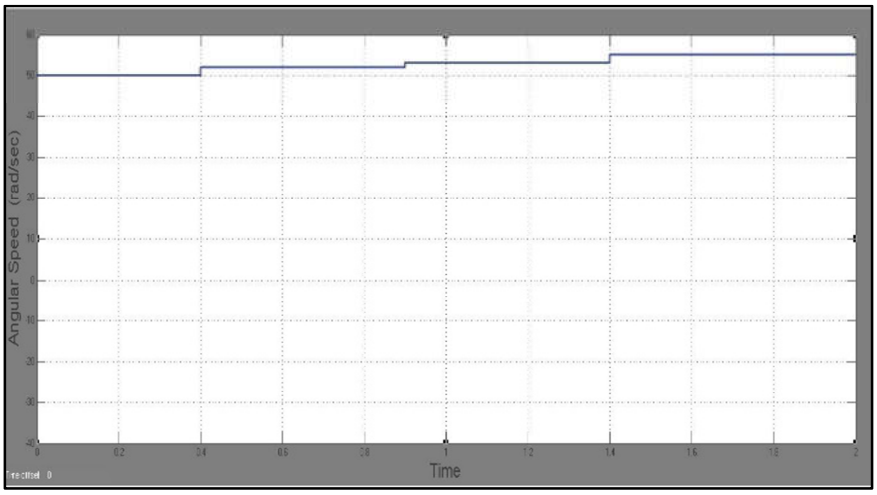

Fig. 13. Angular Speed in rad/sec

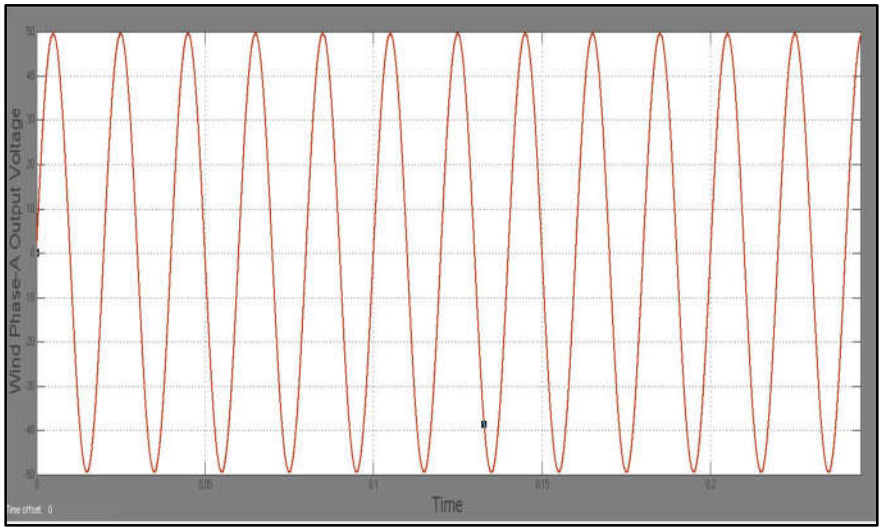

Fig. 14. Phase-A Voltage for wind

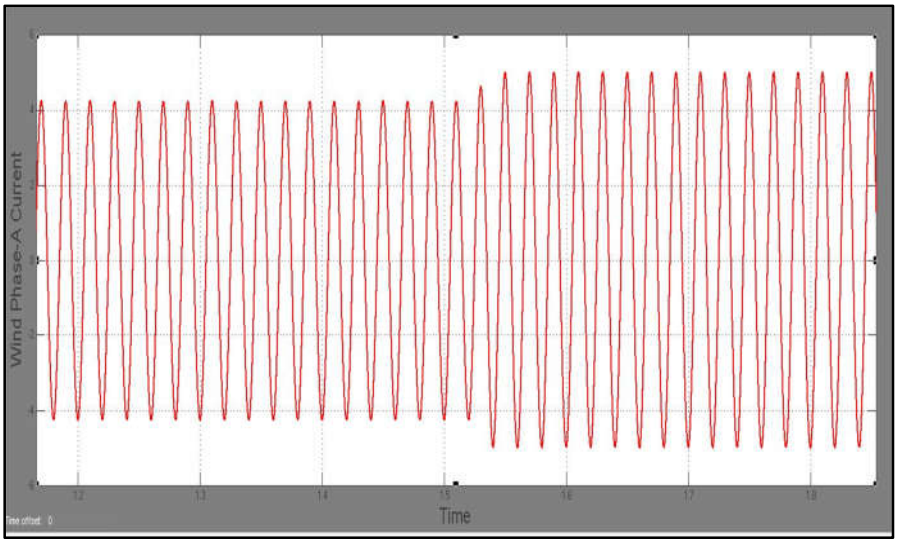

Fig. 15. Phase-A Current for wind

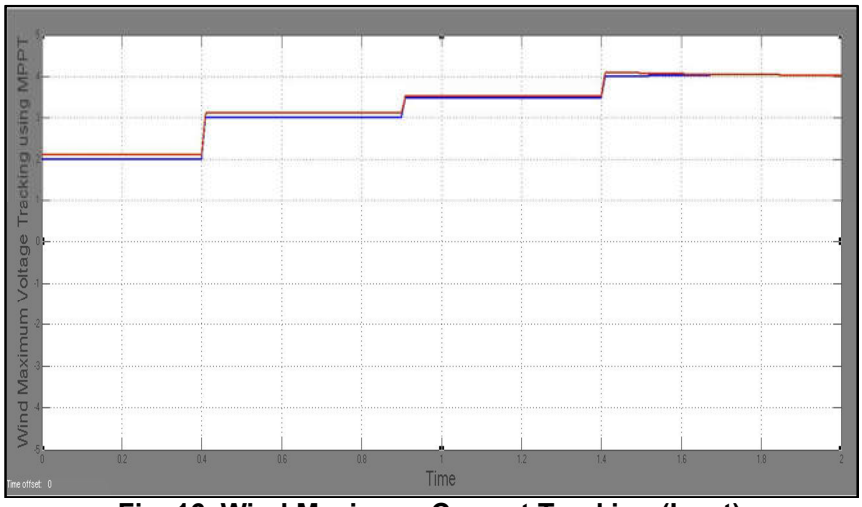

Fig. 16. Wind Maximum Current Tracking (Imwt)

- Solar PV Output Parameters:-

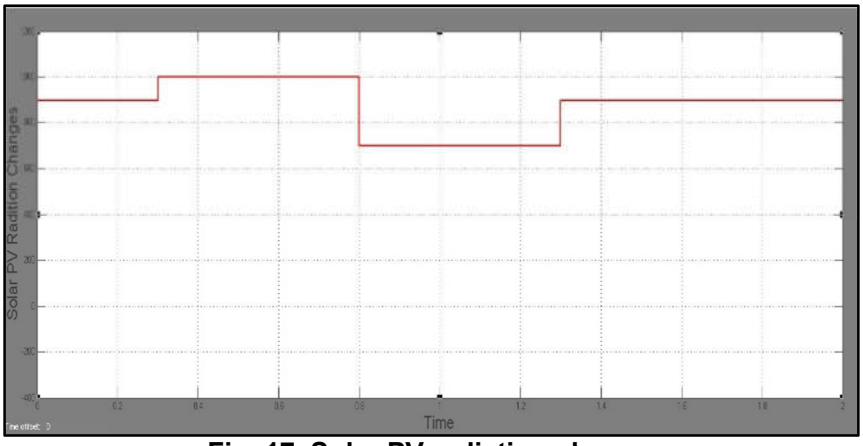

Fig. 17. Solar PV radiation change

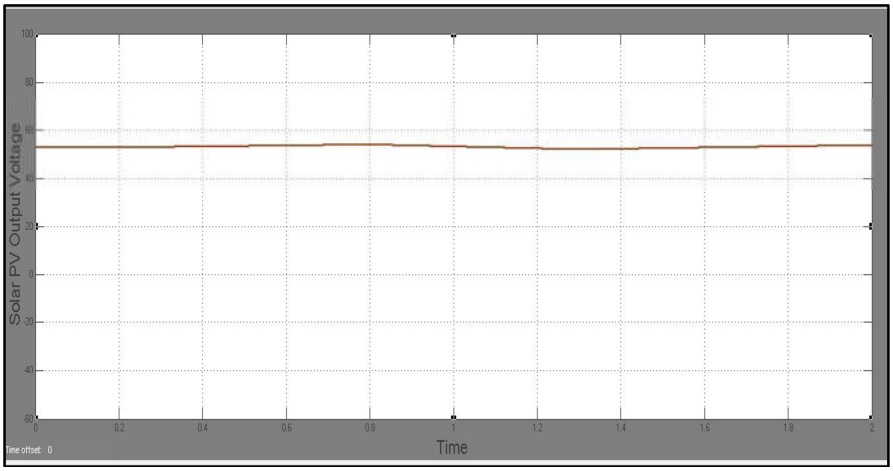

Fig. 18. Solar PV output voltage

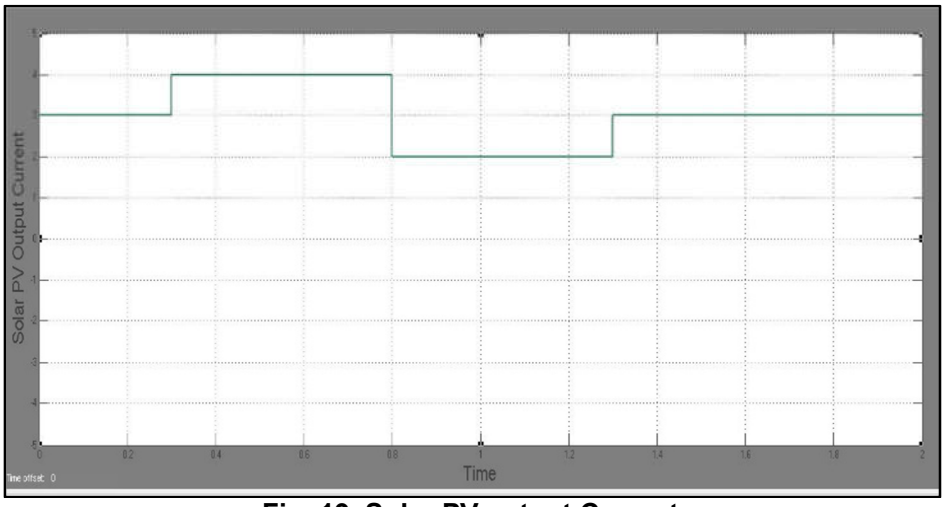

Fig. 19. Solar PV output Current

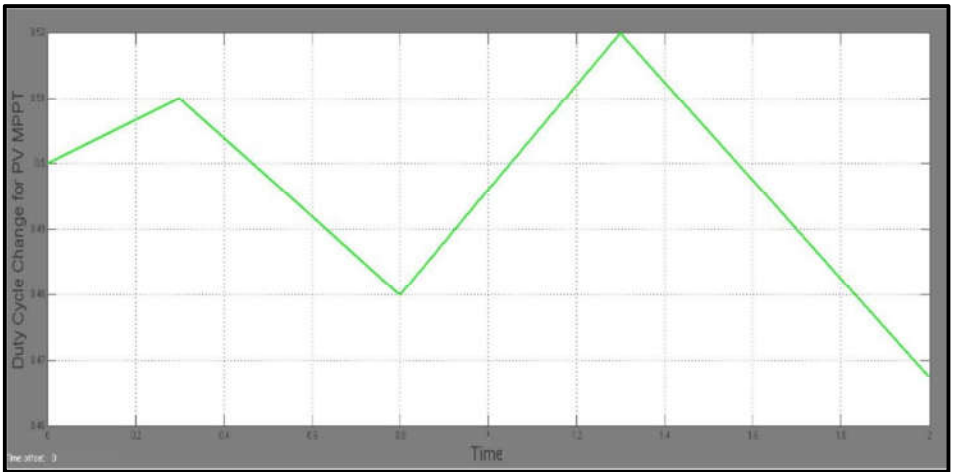

Fig. 20. Duty Cycle for Solar PV MPPT Controller

- Load Side Parameters:-

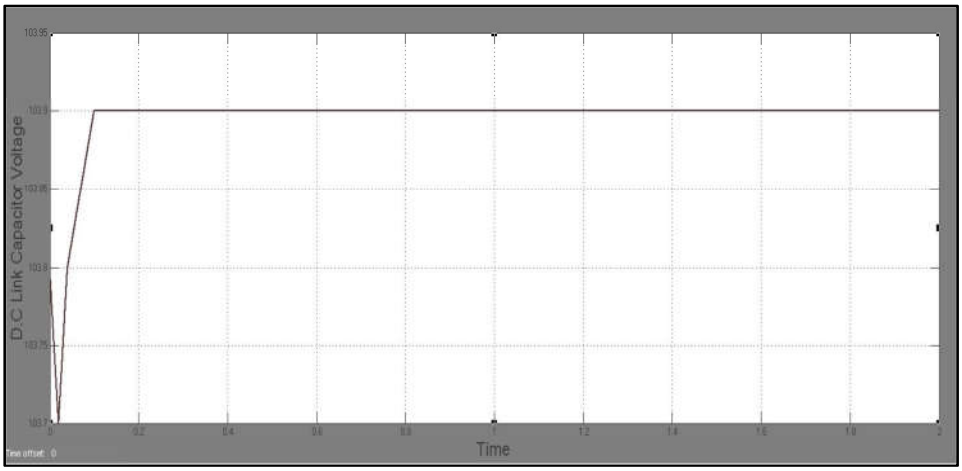

Fig. 21. Common D.C link Capacitor Voltage

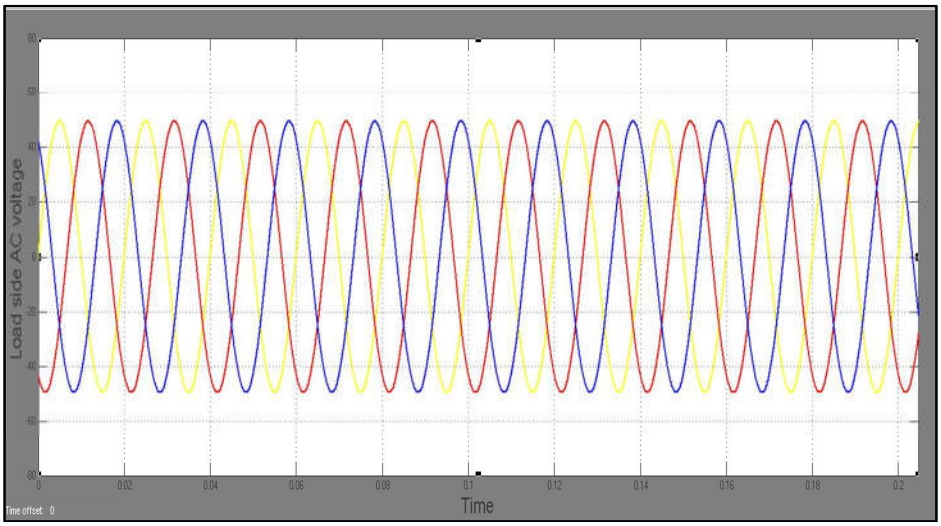

Fig. 22. Load side A.C output Voltage

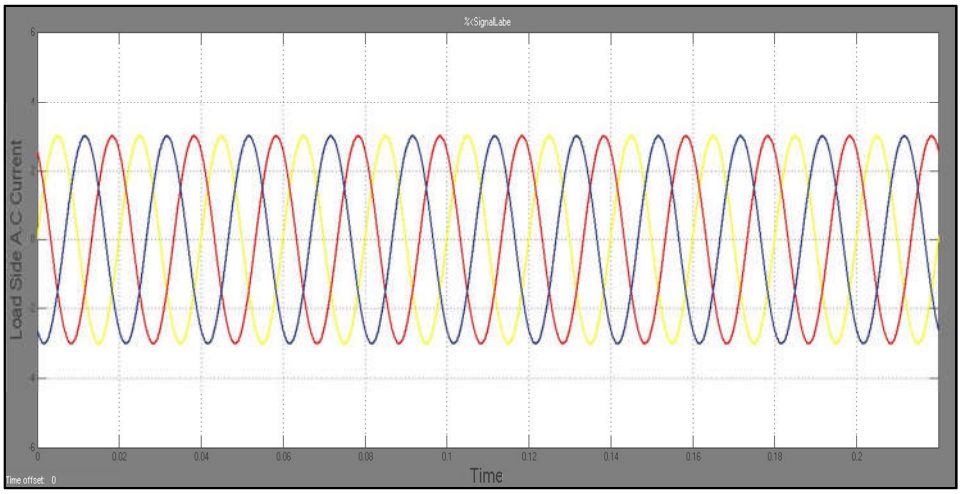

Fig. 23. Load side A.C output Current

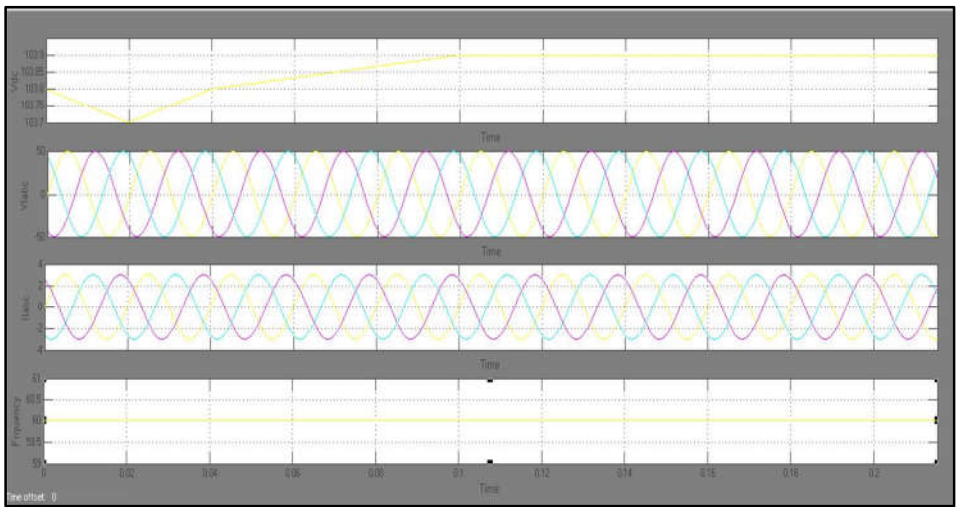

Fig. 24. Load side all Parameters

6. Conclusion

This paper presents a hybrid wind/PV energy system for standalone system. The standalone hybrid system is better than a single energy source. The wind energy systems may not be technically viable at all sites because of low wind speeds and being more unpredictable than solar energy. Modeling, control design, and stability analysis have been presented in detail. Simulated performance of the system has been obtained with an improved P&O method for MPPT in Solar PV. This Project also represents the modelling and Simulation of Solar PV System using MATLAB-SIMULINK software. It has been demonstrated that the improved P&O based MPPT is more reliable and efficient during weather changes in presence of many power converters operated simultaneously. Further, it has been demonstrated that the APC with AWPI voltage controller regulates constant and sinusoidal AC voltage without any saturation and overshoot during transients. Simulated performance has been validated on real-time laboratory prototype for improved P&O based SMC with boundary layer and the APC with AWPI controller with reduced number of sensors and hardware complexity.

7. Acknowledgment

Authors like to thanks L.D. College of Engineering, Ahmedabad affiliate to Gujarat Technological University for providing necessary equipment for these experiments and constant encouragement to do this work.

REFERENCES

[1] Rezkallah, A. Hamadi, A. Chandra and B. Singh, “Design and Implementation of Active Power Control with Improved P&O Method for Wind- PV-Battery based Standalone Generation System”, IEEE TRANSACTIONS ON INDUSTRIAL ELECTRONICS, 0278-0046 (c) 2017 IEEE.

[2] Seema and Bhim Singh, “Grid Synchronization Control for an Autonomous PV- Wind-Battery Based Micro grid”, 978-1-5386-1138-8/18/ ©2018 IEEE.

[3] Adriana Luna, Nelson Diaz, Mehdi Savaghebi, Juan C. Vasquez, Josep M. Guerrero, Kai Sun and Kai Sun, “Optimal Power Scheduling for a Grid- Connected Hybrid PV-Wind-Battery Microgrid System”, 978-1-4673-9550- 2/16/©2016 IEEE.

[4] Adriana C. Luna, Nelson L. Diaz, Mois`es Graells, Juan C. Vasquez, Senior, and Josep M. Guerrero, “Mixed-Integer-Linear-Programming Based Energy Management System for Hybrid PV-wind-battery Microgrids: Modelling, Design and Experimental Verification”, IEEE Transactions on Power Electronics, 0885- 8993 (c) 2016 IEEE.

[5] Luis I. Minchala-Avila, Luis Garza-Casta˜n´on, Youmin Zhang and H´ector J. Altuve Ferrer, “Optimal Energy Management for Stable Operation of an Islanded Microgrid”, IEEE Transactions on Industrial Informatics, 1551-3203(c) 2016 IEEE.

[6] Luis Orlando Polanco Vasquez , Cristian Andrés Carreño Meneses, Alejandro Pizano Martínez, Juana López Redondo, Manuel Pérez García and José Domingo Álvarez Hervás, “Optimal Energy Management within a Microgrid: A Comparative Study”, Energies 2018, 11, 2167; doi:10.3390/en11082167.

[7] Optimal Energy Management of Building Microgrid Networks in Islanded Mode Considering Adjustable Power and Component Outages Van-Hai Bui 1 , Akhtar Hussain 1, Hak-Man Kim 1,* and Yong-Hoon Im 2,*1 Department of Electrical Engineering, Incheon National University, 12-1 Songdo-dong, Yeonsu-gu, Incheon 406840, Korea; buivanhaibk@inu.ac.kr (V.-H.B.); hussainakhtar@inu.ac.kr (A.H.) 2 Korea Institute of Energy Research, 152 Gajeong-ro, Yuseong-gu, Daejeon 34129, Korea.

[8] Optimal Energy Management of Building Microgrid Networks in Islanded Mode Considering Adjustable Power and Component Outages Y. Nian*, S. Liu*, D. Wu*, J. Liu**North China Electric Power University.