IOT Based Health Monitoring System using Arduino

Pooja Arjun Baad
Department of Electronics And Telecommunication
SVERI'S college of Engineering, Pandharpur
India

Pooja Anil Ghadage
Department of Electronics & Telecommunication
SVERI's college of Engineering, Pandharpur, India

Supriya Sayaji Parbat
Department of Electronics & Telecommunication
SVERI's college of Engineering, Pandharpur
India

Ajit D. Mali-Vasekar
Department of Electronics & Telecommunication
SVERI's College of Engineering, Pandharpur, India

Abstract: In this paper we have developed such form of system that is employed for continuous observation of patients in hospital likewise at home. We tend to introduce IoT primarily based health observation system with exploitation of Arduino-UNO. In this research work we are monitoring the heart beat rate and body temperature of a patient. We have used Arduino-UNO board as a microcontroller, in which 8 bit Atmega 328 microcontroller is inbuilt. LM 35 is used for sensing body temperature and DIY pulse sensor XD-58C is used for heart beat rate measurement. EP8266 WiFi module is used to transmit the patient's observed dada from Arduino uno to the server (smartphone is used as a server for this application). The BLYNK application is used for IoT purpose. The transferred information from WiFi module can be viewed on the app from anywhere, so that doctors can monitor patients remotely and if something goes wrong in observed information they can take immediate actions.

Keywords: - : Health monitoring, IoT, BLYNK app, Heart beat rate, Body temperature, Arduino-UNO.

I. INTRODUCTION

Health is a fundamental right of humans. Large number of people across the world are dying daily due to heart diseases. One major reason for this large number of deaths is the absence of timely and effective assistance. Continuous monitoring of heart patients can save lives considerably through the timely check up to prevent heart attacks. So it very much needed that a system would be developed which would monitor the heart patients continuously, effectively and which would be compact in size, light weight, low cost, and mobile so that a patient can carry it anywhere just like our mobile phones.

The monitoring system is based on wireless sensor nodes. Failure of the node is mainly distributed to

the system in the form of IoT, which still makes the system intentional. The use of the IoT protocol allows the integration of third - party application and devices[1]. Advances in telecommunication and IT sector have given birth to Internet of Things (IoT). In todays world, the effective use of IoT technologies provided convenience to the physicians as well as patients, as they can be applied to various medical areas (such as real-time monitoring, patient information management, and healthcare management). The body sensor network (BSN) technology is one from the core technologies of IoT developments in healthcare system, in which a patient can be monitored by collection of tiny powered and lightweight wireless sensor nodes [2]. To grab the benefit of emerged IoT in the field of healthcare, the consumers, physicians and patients need to think of some innovative and reliable methods. Due to the emergence of help of IoT's potential these people now can collect real-time raw data from unlimited number of patients for a continuous period of time through smart devices connected on an interconnected network[4]. The patient monitoring system is based on Internet of things, can be an alternative and its use helps the patients of chronic diseases. The aim is for improving the quality of life of patients, not only by monitoring them, but equally enabling them for improving their eating habits and workout routines[5].

In this research work we tried to develop such a kind of system which will meet above mentioned criteria and is equally helpful to monitor patients, especially heart patients. So proposed system monitors heart patient's heart beat rate and temperature effectively and helps for preventing risk of heart attacks.

II. METHODOLOGY AND DESIGN

The IoT-based health monitoring system works on the principle of monitoring a patient's body temperature and heart rate. The heart rate device is attached to the patient's fingers and the temperature sensor is also attached to the patient's body. Temperature sensor is a resistance-based sensor whose resistance is determined by changing the patient's body temperature, as well as the heart rate sensor, a vibration or flow-based sensor whose value is transmitted in the form of electrical signal. Two sensor measurement values are obtained by Arduino-UNO, the main or intelligent controller of this system. After receiving these values, these values are displayed on the LCD display and simultaneously sent to the IoT system using the Wi-Fi module. There are Wi-Fi modules in the IoT system which display these values on a separate websites and apps using Wi-Fi sources, and the discussion is used here for this purpose. Using the website or app, doctors can track their patients' heart rate and temperature from anywhere.

In this system the two sensors are used one is temperature sensor another one is pulse rate sensor. For analyzing the data graphically, we used BLYNK android app and for transmitting data to the IoT cloud we used mobile phone and IoT technology. To operate this system user needs a Wi-Fi connection. The Arduino board connects to Wi-Fi network using Wi-Fi module. The Arduino board reads input from the two sensors. Then this input is sent to the IoT cloud with help of Wi-Fi module. The measured inputs are displayed on LCD screen. Simultaneously

this data is sent to IoT cloud and measured data is displayed on doctor's screen when app is opened. The threshold value range is set to the system. If available value is greater or less than threshold value range then notification message will be displayed on the smart phone's screen of the doctor.

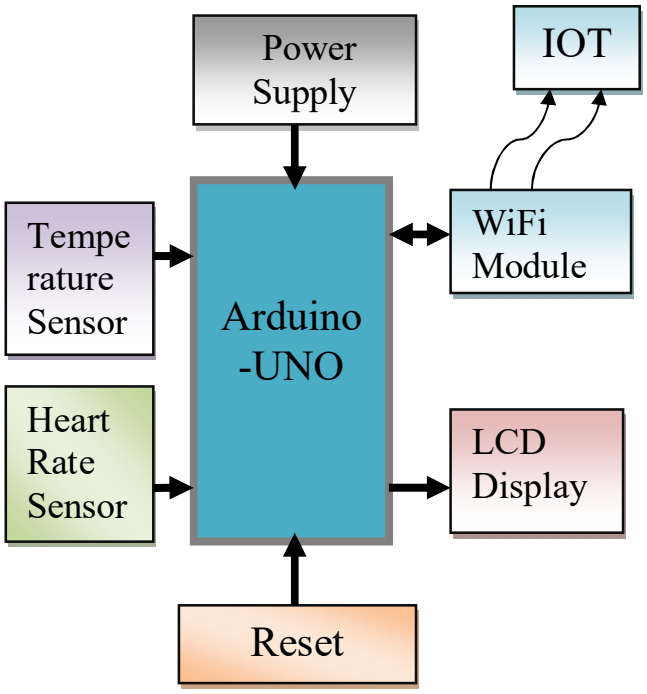

Figure 1: Block diagram of proposed system

Health monitoring structure using IOT based device can automatically exchange information with health organization through the internet.

Components:

9V battery: 9V Carbon Zinc general purpose battery is used for powering Arduino.

LCD display: LCD displays are used to display the patient's body temperature and heart rate. We used the 16×2 LCD display which can be powered by 5v dc supply.

Arduino-UNO: The Arduino-Uno is a microcontroller board based on Atmel's 8 bit microcontroller ATmega328P. It has 14 digital inputs / outputs, 6 analog inputs, 16 MHz crystal, USB and reset button. Arduino Software (IDE) provides easy application development on the Windows platform. The Arduino Uno Eclipse plug-in provides enhanced program / code manipulation. However, debugging capabilities with Arduino Uno are very limited, but serial port logs can serve as good mechanisms for detecting program flow and troubleshooting problems.



Figure 2: Arduino-UNO Board

Temperature sensor: Temperature sensors are used to measure a patient's body temperature. LM35D is used having temperature sensing range from 0 to 100 degrees Celsius. It is an integrated circuit model of 3 pins, configured as a VCC pin to use this pin 1, pin 2 configured as a data pin, and pin 3 configured as a ground pin. It works with 5V dc supply and it interferes with a microcontroller.

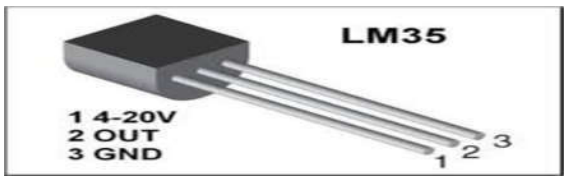

Figure 3: Temperature sensor

DIY pulse sensor: DIY XD58C pulse sensor is used for heart beat rate measurement. It measures the pulses of a heart by measuring the light of a backside LED bouncing back on an ambient light sensor on

the front side. Pulse sensor's front side is used for making contacts with a human body. The pin configuration of pulse sensor is given as: Pin-1 (GND)– It is connected to the GND terminal of the system.Pin-2 (VCC)– It is connected to the supply voltage (+5V otherwise +3.3V) of the system.Pin-3 (Signal)– It is connected to the pulsating o/p signal.

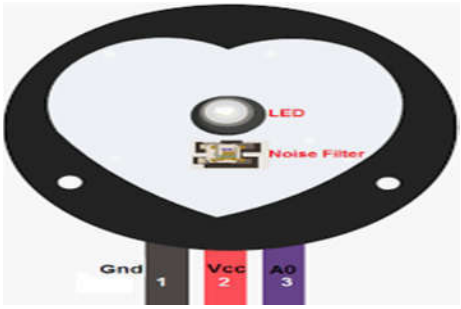

Figure 4: Pulse sensor

IOT system: The IoT system is used to send data such as temperature and heart rate to specific websites and apps. The system has a Wi-Fi module which interferes with the microcontroller and works with a 3.3v to 5v DC supply. We used the smart phone for connecting with WiFi module which is interfaced with Arduino.

Wi-Fi module: The Wi-Fi Fidelity module is used to connect microcontrollers to the Internet for continuous wireless data transmission over the internet. The **ESP8266** is user friendly and affordable device to provide internet connection. The module can work both as a access point and as a station, hence it can easily fetch data and upload it to the internet making Internet of Things easy. It operates on 3.3V DC power supply. The pin functions of Wi-Fi Module is given as: pin-1(Ground): It is connected to the ground of the circuit.pin-2(TX): It is also called as GPIO-1.It is connected to RX pin of programmer/microcontroller to upload program. Also it can act as general purpose input/output pin when not used as TX. Pin-3(GPIO-2): It is general purpose input/output pin.pin-4(CH_EN): It is chip enable-active high.pin-5(GPIO-0): it is also called as flash. It is general purpose input/output pin. It takes module into serial programming when held low during start up. Pin-6(Reset): It resets the module.pin-7(RX): It is also called as GPIO-3. It can act as general purpose input/output pin when not used as RX. Pin-8(VCC): It connects to +3.3V only.

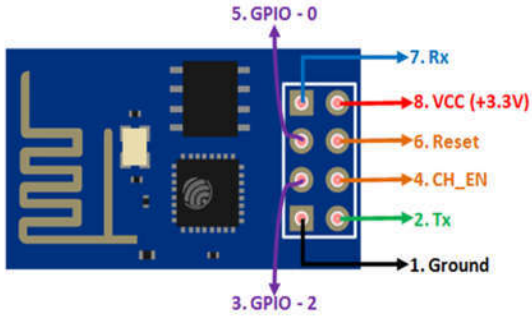

Figure 5: Wi-Fi Module

III. RESULTS AND DISCUSSIONS

In our project we have used two sensors. First is the LM35D temperature sensor which we used for measuring the temperature of the patient. Better accuracy was achieved when the temperature sensor was placed at armpit or tongue. Second sensor we used is the XD58C DIY heart beat sensor. It measures the pulses of heart by measuring light of backside LED bouncing back on ambient light sensor on front side. Better accuracy was achieved when we placed this sensor on fingertip and earlobe. Both the sensors were connected to the analog pins

of Arduino board. Both these sensors provided voltage variations based on their input parameter and these voltage variations were converted into respective output, viz output of LM 35 sensor was converted into temperature in degree celcius and output of DIY pulse sensor is converted into heart beat rate in BPM (beats per minute) through Arduino programming. Figure 6 shows output of pulse sensor after fingertip was placed on it. This image (Figure 6) was captured from serial plotter of Arduino IDE software. Heart beats were noted in the form of spikes in the figure 6. For analog input, Arduino provides digital output ranging from 0 to 1023 levels as Atmega 328 microcontroller in the board has 10 bit inbuilt ADC. We set threshold as 520 for measuring number of pulses. So output level which was higher than the threshold was considered for counting and measuring the heart beat rate in BPM (Beats per Minute). These outputs were displayed on the LCD screen.

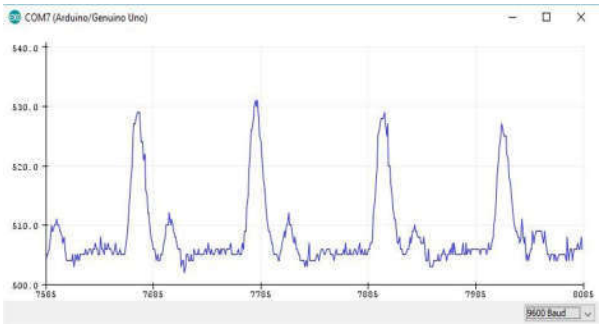

Figure 6: pulse Rate

A 16×2 matrix LCD display was used to display the values of a patient. And these same values were transferred to the android app BLYNK. For transferring measured data to the android app i.e. for making project IoT based we used EP8266 WiFi module. The measures of the sensors were directly displayed on app through the internet connectivity.

IV. CONCLUSION:

Proposed system can be used to monitor the patient's temperature and heart beat rate continuously, effectively and remotely. The doctor can observe patient's health remotely from anywhere across the world and depending upon measures can give consultation and patient needs not to go for O.P.D.(Out Patient Department) in hospital. Thresholds have been set for both temperature and heart beat rate. If any one or both of the values cross the threshold then notification is given on the smart phone by the BLYNK app that we used. Also proposed system is cost effective as components used are affordable. It's compact in size, light weight and easy for carrying along with patient anywhere. The proposed system is a systematic and acceptable for effective assistance to the heart patients.

V. FUTURE SCOPE

The future scope for this project is sensing and displaying other parameters of a patient like ECG, blood pressure, glucose level. Also GPS can be used to enhance this project. The GPS can find the position of patient and this technology can help the doctor to take preventive actions.

VI. ACKNOELEDGMENT:

We would like to acknowledge our sincere gratitude to our project guide Mr. A.D. Mali Vasekar, for his valuable guidance, encouragement and kind co-operation during our project work. Our sincere thanks to Dr. A. S.Vibhute, HOD of ENTC department ,SVERI's college of Engineering, Pandharpur for providing us excellent atmosphere for project work. We would also like to thank Dr. B.P. Ronge Principal SVERI's college of engineering pandharpur, for

giving us an opportunity to work on this project. We would like to thank our parents as they are always supporting us and encouraging us with their best wishes.

VII. REFERENCE

[1] Krishna C S, "Health care monitoring system based on IoT", second IEEE International Conferences on computational system and information technology sustainable solution Apr-2017

[2] shivleela patil,Dr sanjay Pardeshi "Health monitoring system using IoT" International Research journal of Engineering and Technology, volume:05 Issue:04,Apr-2018.

[3]VTamilselvi,Sribalaji,PVigneshwaranP Vinu,J GeethaRamani "IOT based health monitoring systemInternational conference on AdvancedComputingandCommunicationsystems(ICACCS)May-2020

[4] Zankhana Mehul Kalarthi, "Smart Health Care System Using Internet of Things",IJRET: International Journal of Research in Engineering and Technology eISSN:2319- 1163|pISSN: 2321-7308 Apr-2017.

[5] R Nikhil Nair , K. A. Kiran "secure system for human health monitoring" International Conference on Intelligent Computing and control systems ,Apr-2017.

[6 Subha R , Haritha M Nithishna B , Monisha S G "Coma patient health monitoring system using IOT" International Conference on Advanced Computing and Communication systems,May- 2020.

[7] Niket Patii ,Brijesh Iyer "Health monitoring and Tracking system for soldiers using Internet of Thing(IOT)" International Conference on Computing, Communication and Automation , Apr-2017.

[8] ,Nowshad Amin ,Mohammad Tariqul Islam "IOT based helath monitoring system with LoRa communication technology" International Conference on Electrical Engineering and Informatics , Apr-May-2019.

[9] Amandeep Kaur ,Ashish Jasuja "Health monitoring based on pasberry Pi" International Conference on Computing, Communication and Automation , July-2017..

[10] Parmveer Singh ,Ashish Jasuja "IOT based low cost distant patient ECG monitoring system" International Conference on Computing, Communication and Automation, Apr-2017.