VOLTAGE STABILITY ASSESMENT USING MODAL ANALYSIS

[1]Mrs. Rina R. Prajapati
[1]P.G. Scholar,
Electrical Department
LD College of Engineering
Ahmedabad, Gujarat, India.
Mail id- rinamsuthar@gmail.com

[2]Dr. B.J. Shah
[2]Associate Professor,
Electrical Department
LD College of Engineering
Ahmedabad, Gujarat, India.
Mail id- bhavin.shah@ldce.ac.in

Abstract

The continuous increase in the demand of active and reactive power in the power system network has limits as scope for network expansion many a times poses serious problem. The power system must be able to maintain acceptable voltage at all nodes in the system at a normal operating condition as well as post disturbance periods. Among all stability issues, voltage instability due to the inability of the transmission or generation system to deliver the power requested by loads is one of major concerns in today's power system operations. Usually, voltage instability initiates from a local bus but may develop to wide-area or even system-wide instability. Voltage stability assessment in a power system for preventing disaster of voltage collapse. By reducing Jacobian modal analysis can be present for voltage stability assessment. To know the Status of stability eigenvalues are to be find using Jacobian. As the smallest value of eigenvalue will identify critical mode of system. The methodology is tested using IEEE 9 bus of power system.

Keywords—Modal Analysis, IEEE 9 Bus system, Eigen value, voltage collapse, Participation factor,

I. INTRODUCTION

In recent years, modern power systems have experienced many technical challenges due to increasing complexities in operation and structure of the interconnected power grid. Voltage stability is recognized as one of the major problems in many power systems throughout the world such as the western region (WECC) of the United States in 1996, the Chilean power system in 1997 accounting for a loss of 80% of its total load, the Hellenic system covering the entire Athens and the neighboring area in 2004 [1]. Voltage instability is mainly associated with the inability of the power system to maintain acceptable voltages at all buses in the system under normal conditions and after being subject to disturbances such as gradual load increases or outages of critical lines or generating units.

The general characteristic of voltage instability is that the voltage level at different locations slightly changes after the disturbance but abruptly declines near to the collapse point. Therefore, the voltage level itself is not a good indicator. The system operator needs performance indices either in online or offline modes to determine how close the system is to the collapse and what the control actions should be carried out in that event. In offline planning activities, computational speed is generally not a problem. However, for online analysis, real-time or faster-than-real-time tools are of the key interest for monitoring and enhancing stability of the power system. There are a few challenges in developing such tools for online operation. First, power systems under the deregulated environment in many parts of the world are operated by several independent transmission operators. Among these operators, only limited number of information is exchanged primarily due to business competitions. This makes a study of the entire system harder than before [2]. The dynamics involved in voltage instability are restricted to load buses with LTC, restorative loads etc. These load voltage control devices are operated for few minutes to several minutes. So, generator dynamics can be substituted by appropriate equilibrium conditions. Under stressed conditions, coupling between voltage and active power is not weak [3]. So, insufficient active power in the system also leads to voltage instability

problems. The following are the main contributing factors to voltage instability problem.

- Increased stress on power system.
- Insufficient reactive power resources.
- Load restoring devices in response to load bus voltages.
- Unexpected and or unwanted relay operation following a drop-in voltage magnitude
- Line or generator outages.
- Increased consumption in heavy load centers.

II. CHALLENGES AND RESEARCH OBJECTIVES

Voltage stability problem is significant since it affects the power system security and reliability. Voltage stability [1] is related to the \ability of a power system to maintain acceptable voltages at all buses under normal conditions and after being subjected to a disturbance". Definitions proposed by various authors related to voltage stability are mentioned in the literature review. Voltage instability is an aperiodic, dynamic phenomenon. As most of the loads are voltage dependent and during disturbances, voltages decrease at a load bus will cause a decrease in the power consumption. However, loads tend to restore their initial power consumption with the help of Distribution Voltage Regulators, Load Tap Changers (LTC) and thermostats. These control devices try to adjust the load side voltage to their reference voltage. The increase in voltage will be accompanied by an increase in the power demand which will further weaken the power system stability. Under these conditions' voltages undergo a continuous decrease, which is small at starting and leads to voltage collapse. When a single machine is connected to a load bus then there will be pure voltage instability. When a single machine is connected to infinite bus then there will be pure angle instability. When synchronous machines, infinite bus and loads are connected then there will be both angle and voltage instability but their influence on one another can be separated [2].

Even though voltage instability phenomenon is dynamic in nature, both static and dynamic analysis methods [4] are used. To operate the system safely, system is to be analyzed for various operating conditions and contingencies. In most cases, the system dynamics affecting voltage stability are usually quite slow and much of the problem can be analyzed using static analysis that gives information about the maximum load ability limit and factors contributing to instability problem. Static approach involves computation of only algebraic equations and it is faster than dynamic approach. Static analysis takes less computational time compared to dynamic analysis and conventional power ow is used in the static analysis. A few static voltage stability analysis methods are proposed in the literature for analyzing the problem. The method was also shown to have parallels with the well-accepted modal analysis of the Jacobian matrix. These include defining geometric indices to identify critical buses and participation factors to quantify contribution of network elements to their criticality. The method however does not require post power flow solution processing of the Jacobian matrix; such computational advantage may make it suitable for online applications.

Research Objectives: -

The specific objectives of the research described hereafter are summarized as follows.

- **Study of power system voltage stability**: There are various techniques for assessing voltage stability of the power system, such as continuation method, optimization method, or performance indices. The study emphasizes comparing performances of different indices and suggesting appropriate selection of the analysis method according to availability of data and computational budget.
- Voltage Stability assessment using Modal Analysis for IEEE 14-bus network.
- Voltage stability improvement and comparative analysis.
- Weak grid identification in grid network and integration of STATCOM with weak grid for grid parameters control.

III. VOLTAGE STABILITY

Voltage stability refers to the ability of a power system to maintain acceptable voltages at all buses both under normal operating conditions and after being subject to contingency conditions. Voltage stability is a problem in power systems which are heavily loaded, faulted or have shortage of reactive power. The nature of voltage stability can be analyzed by examining the production, transmission and consumption of reactive power. The problem of voltage stability concerns the whole power system, although it usually has a large involvement in one critical area of the power system. A power system enters a state of voltage instability when a

disturbance results in a progressive and uncontrollable voltage decline.

The primary cause of this problem is the sudden load increase, the outages of major generator and transmission line, or a combination of multiple events. In the recent decades, the consequence of voltage instability has resulted in several widespread power interruptions in many power systems throughout the world. These incidents have caused serious losses in terms of economy and public welfare. Therefore, voltage stability studies must be incorporated in planning and operating tools of modern power systems. Voltage stability can be classified as static voltage stability and dynamic voltage stability based on the time frame of incidents. In dynamic considerations, exact modelling of equipments such as transformer, induction motors, SVCs, loads, etc is required.

The analysis can be further categorized into small signal stability and large disturbance stability problems [3]. In the first problem, differential and algebraic equations (DEAs) are linearized around an equilibrium point and Eigen-methods can be applied to determine modes of voltage stability such as [1]. This information is very useful in finding the suitable locations for reactive power compensation devices and in designing controllers such as [3]. On the other hand, DEAs cannot be generally linearized when the disturbance is large. Therefore, the large disturbance voltage stability is handled by numerical integration methods such as [10, 11]. Some of voltage stability analyses involve examination of wide range of system conditions and a few contingencies. In this case, static analysis approach becomes attractive because the method normally involves only the solution of algebraic equations and is less computationally intensive than the dynamic approach. This method provides a practical measure in terms of the distance to collapse for given contingencies. On the other hand, dynamic methods such as time-domain simulations are very appropriate to study the mechanism, chronology leading to instability. According to literature survey, system dynamic associated with voltage stability are usually slow. Therefore, static methods are adequate for examining the existence of equilibrium point for a specified operating condition.

Classification of Power System Stability

A definition of power system stability as given is: Power system stability is the ability of an electric power system, for a given initial operating condition, to regain a state of operating equilibrium after being subjected to a physical disturbance, with most system variables bounded so that practically the entire system remains intact. Classification of power system stability is shown in Figure.1.

Definitions according to IEEE

According to IEEE, the following formal definitions of terms related to voltage stability are given:

- Voltage Stability is the ability of a system to maintain voltage so that when load admittance is increased, load power will increase, and so that both power and voltage are controllable.
- Voltage Collapse is the process by which voltage instability leads to loss of voltage in a significant part of the system.
- Voltage Security is the ability of a system, not only to operate stably, but also to remain stable (as far as the maintenance of system voltage is concerned) following any reasonably credible contingency or adverse system change.

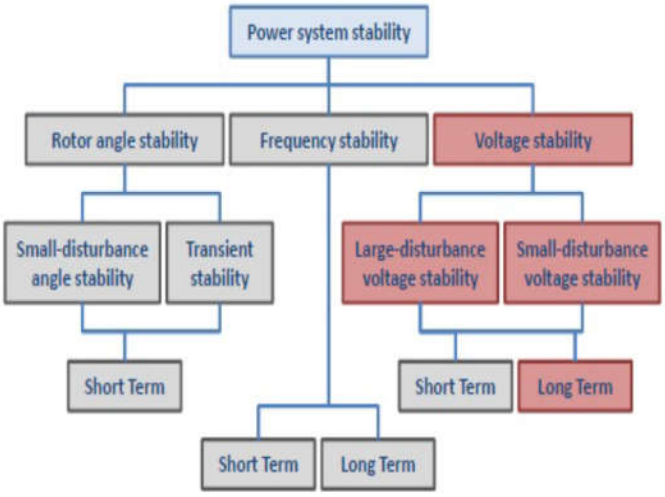

Figure.1: Classification of power system stability

Definitions according to CIGRE

CIGRE [1] defines voltage stability in a general way like other dynamic stability problems. According to CIGRE,

- A power system at a given operating state is small-disturbance voltage stable if, following any small disturbance, voltages near loads are identical or close to the pre-disturbance values.

- A power system at a given operating state and subject to a given disturbance is voltage stable if voltages near loads approach post-disturbance equilibrium values. The disturbed state is within the region of attraction of the stable post-disturbance equilibrium.
- A power system undergoes voltage collapse if the post-disturbance equilibrium volt- ages are below acceptable limits.

V-P and Q-V Curves

V-P curves, also known as the nose curves, show the relationship between the power injection and the corresponding change in voltage at a bus. Figure-2 shows a V-P curve. The upper part of the curve corresponds to a stable operating region, while the lower part of the curve corresponds to the unstable region. The tip of the "nose curve" is known as the stability limit. These curves are obtained by continuation power flow. At the voltage stability limit the Jacobian matrix of power flow equations becomes singular and the regular power flow solution does not converge.

The continuation power flow overcomes this problem by reformulating the load-flow equations so that they remain well-conditioned at all possible loading conditions. This allows the solution of the load-flow problem for stable, as well as unstable equilibrium points (that is, for both upper and lower portions of the V-P curve).

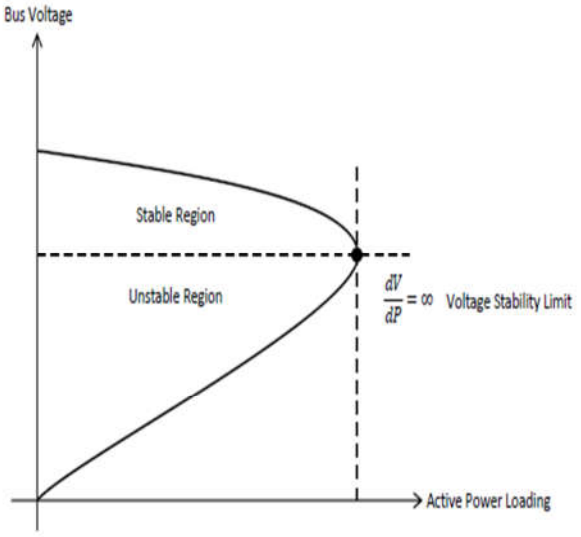

Figure.2 P-V Curve

Another useful characteristic for voltage stability analysis is the Q-V curves. These curves show the sensitivity and variation of bus voltages with respect to reactive power injections. Figure-3 shows a Q-V curve. The bottom of the curve where dQ/dV is equal to zero represents the voltage stability limit. The right-hand side of the curve is stable since an increase in Q is accompanied by an increase in V. The left-hand side is unstable since an increase in Q represents a decrease in V.

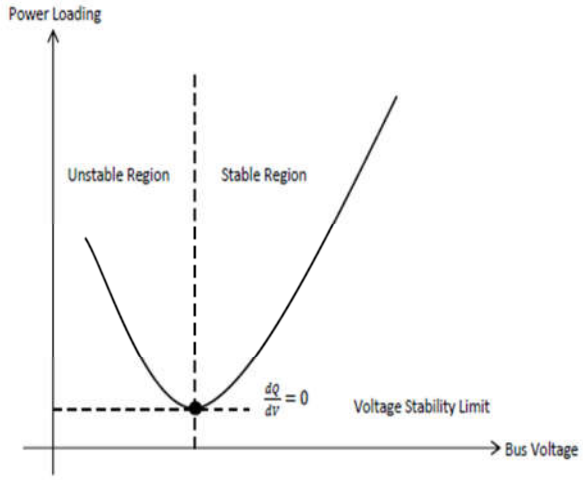

Figure.3 Q-V Curve

P-V and Q-V curves are one of the most considered methods to find active power margin and reactive power margin. However, the main disadvantage of these curves is the fact that for many different operating points and contingencies many such curves would be required to obtain complete information on the voltage stability of the whole system. Each one of those curves is generated by executing many power flows. This makes them very time-consuming and hence not practical for on-line voltage stability monitoring of large power systems. Voltage stability may be classified into two categories. These are

- Large-disturbance Voltage Stability
- Small-disturbance Voltage Stability

Large-disturbance Voltage Stability –

- It is concerned with a system stability to control voltages following a large disturbance such as system faults, loss of load, or loss of generation.
- For determination of this form of stability requires the examination of the dynamic performance of the

system over a period enough to capture of such devices as under load tap changing transformers, generator field, and current limiters.

- Large disturbance voltage studies can be studied by using non-linear time domain simulations which include proper modeling.

Small-Disturbances Voltage Stability –

- The operating state of a power system is said to have small disturbances voltage stability if the system has small disturbances, a voltage near loads does not change or remain close to the pre-disturbance values.
- The concept of small disturbance stability is related to steady state and be analyzed using a small-signal model of the system.

Voltage Stability Assessment

The static voltage stability analysis for a given power system state involves the determination of how close the system is to voltage instability. The proximity to instability can be measured by an index preferably defined in terms of physical quantities such as load level, reactive power reserve, etc. Voltage collapse typically occurs on power systems which are heavily loaded, faulted and/or have reactive power shortages. Voltage collapse is a system instability in that it involves many power system components and their variables at once. Indeed, voltage collapse often involves an entire power system, although it usually has a relatively larger involvement in one area of the power system. Although many other variables are typically involved, some physical insight into the nature of voltage collapse may be gained by examining the production, transmission and consumption of reactive power. Voltage collapse is typically associated with the reactive power demands of loads not being met because of limitations on the production and transmission of reactive power.

Modal analysis

In the Newton Raphson power flow there is the linear system model to represent the injected power in buses as shown in equation [3.1]

$$\begin{bmatrix}\Delta P\\ \Delta Q\end{bmatrix}=\begin{bmatrix}J11 & J12\\ J21 & J22\end{bmatrix}\begin{bmatrix}\Delta\theta\\ \Delta V\end{bmatrix} \quad \text{…….. ……3.1}$$

By letting $\Delta P = 0$ in Equation (3.1):

$$\Delta P = 0 = J11\Delta\theta + J12\Delta V \text{ ,} \Delta\theta = -J11^{-1}J12\Delta V \quad \text{……} \quad 3.2$$

$$\Delta Q = J21\Delta\theta + J22\Delta V \quad \text{……..} \quad 3.3$$

Substituting Equation (3.2) in Equation (3.3)

$$\Delta Q = J\text{R}\Delta V \quad \text{……. …….. } 3.4$$

Where

$J_R=[J22 - J21]$

$J_R = [J22 - J21J11^{-1}\ J12]$

J_R is the reduced Jacobian matrix of the system.

Equation (3.4) can be written as

$$\Delta\text{V} = [\text{JR}^{-1}\,\Delta\text{Q}] \quad \text{……... } 3.5$$

The matrix *JR* represents the linearized relationship between the incremental changes in bus voltage (ΔV) and bus reactive power injection (ΔQ). It's well known that, the system voltage is affected by both real and reactive power variations. In order to focus the study of the reactive demand and supply problem of the system as well as minimize computational effort by reducing dimensions of the Jacobian matrix *J* the real power ($\Delta P = 0$) and angle part from the system in Equation (3.1) are eliminated.

The eigenvalues and eigenvectors of the reduced order Jacobian matrix J_R are used for the voltage stability characteristics analysis. Voltage instability can be detected by identifying modes of the eigenvalues matrix J_R. The magnitude of the eigenvalues provides a relative measure of proximity to instability. The eigenvectors on the other hand present information related to the mechanism of loss of voltage stability. Eigenvalue analysis of J_R results in the following

$$J_R = \xi \wedge \eta \quad \text{…… } 3.6$$

ξ = right eigenvector matrix of JR

η = left eigenvector matrix of JR

$\wedge$=Diagonal eigenvalue matrix of J_R

Equation (3.6) can be written as:

$J_R = \emptyset \wedge^{-1} \Gamma$ …… 3.7

Where $\emptyset \Gamma = I$

Substituting Equation (3.7) in Equation (3.5):

$\Delta V = \emptyset \wedge^{-1} \Gamma \Delta Q$ …….. ……..3.8

Where λi is the i[th] eigenvalue, $\emptyset i$ is the of ith column right eigenvector and Γi is the i[th]row left eigenvector of matrix *JR*.

Each eigenvalue λi and corresponding right and left eigenvectors $\emptyset i$ and Γi, define the i[th] mode of the system. The i[th]modal reactive power variation is defined as:

$\Delta Qmi = Ki\emptyset i$ …….. 3.9

Where *Ki* is a scale factor to normalize vector such that

$Ki^2 \sum \emptyset ji^2 = 1$

The corresponding i[th]modal voltage variation is:

$\Delta Vmi = \frac{1}{\lambda i} \Delta Qmi$ ……. 3.10

Equation (3.10) can be summarized as follows:

The voltage stability can be defined by the mode of eigenvalue λi. The minimum eigenvalue in a power system is the global VSI value. Larger value of λi will give smaller changes in the voltages when the small disturbance happen. When the system is weaker, the voltage becomes weaker. A system is stable when the eigenvalue of Jr is positive. The limit is reached when one of the eigenvalue reach zero. If one of the eigenvalue is negative the system is unstable.

There is no need to evaluate all the eigenvalues of J_R of a large power system because it is known that once the minimum eigenvalues becomes zeros the system Jacobian matrix becomes singular and voltage instability occurs. So the eigenvalues of importance are the critical eigenvalues of the reduced Jacobian matrix J_R. Thus, the smallest eigenvalues of *JR* are taken to be the least stable modes of the system. The rest of the eigenvalues are neglected because they are considered to be strong enough modes. Once the minimum eigenvalues and the corresponding left and right eigenvectors have been calculated the participation factor can be used to identify the weakest node or bus in the system.

Identification of the Weak Load Buses

The minimum eigenvalues, which become close to instability, need to be observed more closely. The appropriate definition and determination as to which node or load bus participates in the selected modes become very important. This necessitates a tool, called the participation factor, for identifying the weakest nodes or load buses that are making significant contribution to the selected modes.

If $\emptyset i$ and Γi represent the right- and left- hand eigenvectors, respectively, for the eigenvalue λi of the matrix J_R, then the participation factor measuring the participation of the kth bus in i[th] mode is defined as

$Pki = \emptyset ki \Gamma ki$ …… 3.11

Note that for all the small eigenvalues, bus participation factors determine the area close to voltage instability.

Equation (3.11) implies that *Pki* shows the participation of the ith eigenvalue at bus *k*. The node or bus *k* with highest *Pki* is the most contributing factor in determining ith mode. Therefore, the bus participation factor determines the area close to voltage instability provided by the smallest eigenvalue of *JR*.

IV. SIMULATION AND RESULT DISCUSSION

A) Circuit Diagram and Description

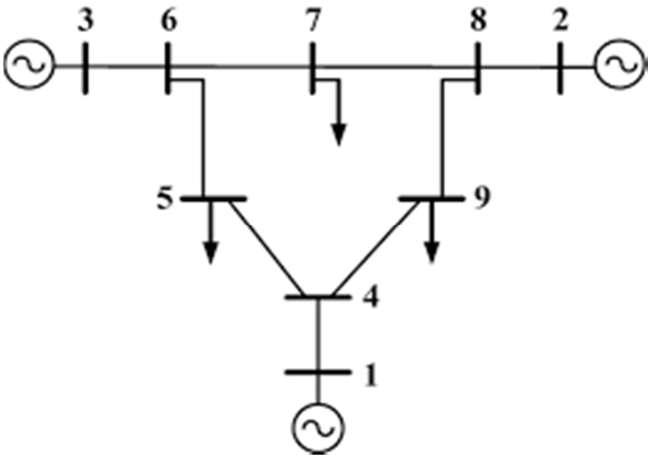

Fig 11: The IEEE 9-bus test system

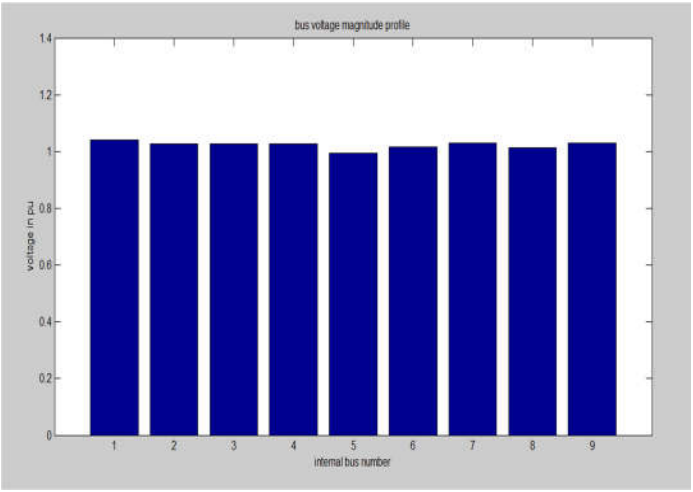

Fig. Voltage profile of all Buses (IEEE-9 Bus system)

B) Circuit Description

An IEEE 9-bus test system as shown in Fig. 3 is used for voltage stability studies. The test system consists of three generators (bus no. 1, 2, 3), six PQ bus or load bus (bus no. 4, 5, 6, 7, 8, 9) and 6transmission lines.

The Modal analysis method has been Successfully applied to the IEEE 9 bus power system. The Eigen value analysis are done for selected buses in order to identify the weakest bus. A power flow program based on Matlab is developed to:

1. Calculate the load flow solution.

2. Analyze the voltage stability based on modal analysis.

The modal analysis method is applied and the voltage profile of the buses is presented from the load flow simulation. Then, the minimum eigenvalue of the reduced Jacobian matrix is calculated. After that, the weakest load buses, which are subject to voltage collapse, are identified by computing the participating factors. The results are shown as follows

Figure shows the voltage profile of all buses of the Western System Coordinating Council (WSCC) 3-Machines 9-Bus system as obtained from the load flow. It can be seen that all the bus voltages are within the acceptable level (±5%); some standards consider (±10%). The lowest voltage compared to the other buses can be noticed in bus number 5.Since there are nine buses among which there is one swing bus and two PV buses, then the total number of eigenvalues of the reduced Jacobian matrix J_R is expected to be six. Participation factors is calculated for min. Eigen value λmin = 5.6802.

Table 1

Voltage Profile, Participation Factors for WSCC 9 Bus System

Bus No	Voltage Profile	Participation Factor
1	1.0400	0
2	1.02530	0
3	1.02500	0
4	1.02562	0.113897037
5	0.99327	0.275674748
6	1.01573	0.268569891
7	1.02820	0.109846004
8	1.01178	0.166295948

9	1.02891	0.065716372

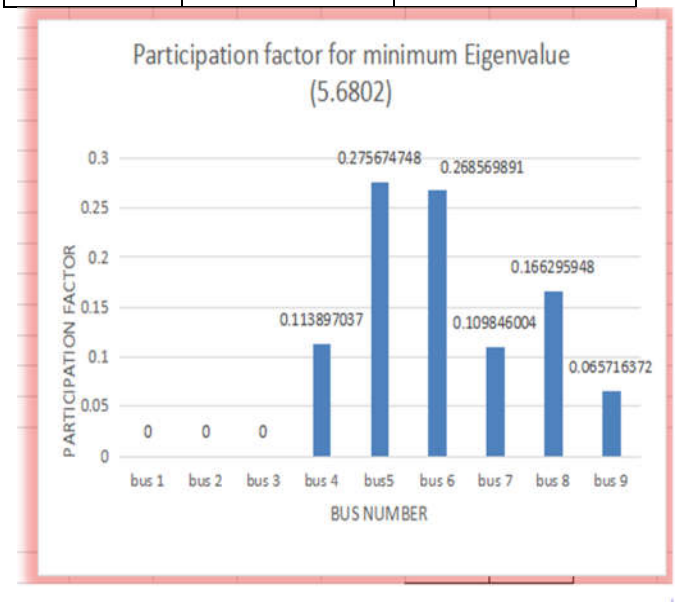

Fig.12: Participating factor for minimum eigenvalue

The result shows that the buses 5, 6 and 8 have the highest participation factors to the critical mode. The largest participation factor value "**0.2756**" at bus 5 indicates the highest contribution of this bus to the voltage collapse.

V. CONCLUSION

In this work, voltage stability problem is analyzed in view of voltage stability assessment. Simulations are carried out on IEEE standard 9 bus systems. IEEE 9-bus system modelling is an important aspect in voltage stability analysis and various load models are therefore considered. In this paper, The Modal analysis technique is applied to investigate the stability of the power systems and that method computes the smallest eigenvalue and the associated eigenvectors of the reduced Jacobian matrix using the steady state system model. The magnitude of the smallest eigenvalue gives us a measure of how close the system is to the voltage collapse. Then, the participating factor can be used to identify the weakest node or bus in the system associated to the minimum eigenvalue. The obtained results agreed about the weakest buses that contribute to voltage instability or voltage collapse. The modal analysis feature was tested on IEEE-9 bus test system. This method gives bus participation factors and branch participation factors that are used to identify the critical buses and critical branches. The technique was demonstrated as an extremely useful method for steady state voltage stability analysis, providing relative measure of the system to the stability limit, and correctly predicting the critical buses and weak transmission branches in the power network.

REFERENCES

1. Gao B, Morison GK, Kundur P. Voltage stability evaluation using modal analysis.IEEE Trans Power Syst 1992;7(4):1529,1542
2. Mir Sayed Shah Danish, Atsushi Yona and Tomonobu Senjyu, "A Review of Voltage Stability Assessment Techniques with an Improved Voltage Stability Indicator", Int. J. Emerg. Electr. Power Syst. 2015; 16(2): 107–115, 2015.
3. Shuaihu Li, Yi Tan, Canbing Li, Yijia Cao, Lin Jiang, "A Fast Sensitivity-based Preventive Control Selection Method for Online Voltage Stability Assessment", IEEE Transactions on Power Systems, 2017.
4. Bai Cui, and Zhaoyu Wang, "Counter example to Equivalent Nodal Analysis for Voltage Stability Assessment", IEEE TRANSACTIONS ON POWER SYSTEMS, 2015.
5. Jong Min Lim and Christopher L. DeMarco, "SVD-Based Voltage Stability Assessment From Phasor Measurement Unit Data", IEEE TRANSACTIONS ON POWER SYSTEMS, 2015.
6. K. A Ellithy, A. Gastli, T. Al-Khusaibi, and M. Irving, "Voltage Stability Margins Assessment for Muscat power system", Elsevier Publications Electrical Power and Energy System, 2002.
7. Denis Hau Aik Lee, "Voltage Stability Assessment Using Equivalent Nodal Analysis", IEEE TRANSACTIONS ON POWER SYSTEMS, 2015.
8. Chemikala Madhava Reddy, "Power System Voltage Stability Analysis", Indian Institute of Technology Hyderabad, Department of Electrical Engineering, June 2011
9. Mir Sayed Shah Danish, Atsushi Yona and Tomonobu Senjyu, "A Review of Voltage Stability Assessment Techniques with an Improved Voltage Stability Indicator", Int. J. Emerg. Electr. Power Syst. 2015; 16(2): 107–115, 2015.
10. Shuaihu Li, Yi Tan, Canbing Li, Yijia Cao, Lin Jiang, "A Fast Sensitivity-based Preventive Control Selection Method for Online Voltage Stability Assessment", IEEE Transactions on Power Systems, 2017.

11. Bai Cui, and Zhaoyu Wang, “Counter example to Equivalent Nodal Analysis for Voltage Stability Assessment”, IEEE TRANSACTIONS ON POWER SYSTEMS, 2015.
12. Jong Min Lim and Christopher L. DeMarco, “SVD-Based Voltage Stability Assessment From Phasor Measurement Unit Data”, IEEE TRANSACTIONS ON POWER SYSTEMS, 2015.
13. K. A Ellithy, A. Gastli, T. Al-Khusaibi, and M. Irving, “Voltage Stability Margins Assessment for Muscat power system”, Elsevier Publications Electrical Power and Energy System, 2002.
14. Denis Hau Aik Lee, “Voltage Stability Assessment Using Equivalent Nodal Analysis”, IEEE TRANSACTIONS ON POWER SYSTEMS, 2015.
15. 15.G. Verghes, I. Perez-Arriaga and F. Schewwppe, "Selective Modal Analysis With Application To Electric Power systems", Part II IEEE trans, I. On Power APP. And System, Vol. PAS 101, No. 9, pp. 3117- 3134, 1982.
16. D.V.Bhaskar Reddy , “Voltage Collapse Prediction And Voltage Stability Enhancement by using Static var Compensator” , Int. Journal of Engg & Research and application,2013