SMART GRID ENERGY CONTROL IN ELECTRIC VEHICLE USING IOT

Mr. D. Sujeetha, M.E.,
Assistant Professor,
Computer Science and Engineering,
Mahendra Engineering College, Namakkal, India-637503

V. Deepa, S. Muthukumari & R. Priya,
UG Students,
Computer Science and Engineering,
Mahendra Engineering College, Namakkal, India-637503

ABSTRACT

The Internet has better potential for the development of smart grid applications. More and more distributed power generation, current aging grid infrastructure and calls for network transformation have sparked interest in smart phases. Widely used internal combustion based vehicles have contributed to severe adverse effects on the environment and accelerated fossil fuel reserves have led to a sharp rise in natural gas prices over the past two decades. These challenges, along with inefficiencies associated with traditional power trains, have been taken seriously by the automotive industry and have led to the electrification of power electronic in automotive systems. In electric vehicles, the impulse is supplied in whole or in part by an electric motor with an on-board energy storage system. In an attempt to overcome the limitations of existing energy storage devices and contribute to the electrification of automobiles, this article explores the possibilities and capabilities of hybrid energy storage systems (HESS), the use of batteries and ultra-capacitor units, and the use of laboratory mockups. The HESS topology is chosen based on the simplicity of power and control circuits, cost and efficiency. The design takes into account the required power, converter losses, limitations of the energy storage device, and the quality of the current received from the battery cells. The results are presented to verify the expectations of the analysis and the simulation results.

Keywords: Internet of Things (IOT), Energy Storage device, Battery, Simulation.

I.INTRODUCTION

The popularity of cars has brought so much comfort to our lives in modern society. However, the characterization of traditional power vehicles by internal combustion engines (ICE) has caused severe environmental crises such as global warming and degradation of air quality. These issues have received considerable attention from the government and the public. USA. The president's stated goal with other leaders of the G8 is to limit global warming by 2 degrees Celsius since the G8 summit in 2030.As a result, stricter exhaust regulations, such as EU5 and EU6, have forced automakers to use renewable energy in their vehicles. Behind the growing environmental challenges, raising public awareness is a driver for continued technological development. Who knows EVs are willing to buy "a traditional car that offers the same comfort and value as money for EVs" Market research shows. This event accelerates the supply of electric vehicles (EVs) to automakers. And new technological advances in the field of hybrid electric vehicles (HEV).

1.1 OBJECTIVE

The main objective of the project is to establish an active energy supply control of connected electric vehicles based on the Internet of Things. The Internet of Things (IOT) aims to interconnect the physical world and cyberspace. IOT expands on a new communication of multi-sensor collaboration that makes the local environment feel independent. The sensor model to achieve global environmental awareness.Performance can be further improved by reducing the block voltage required for semiconductor devices. There are several strategies to reduce the voltage pressure of semiconductor devices. The introduction of new technology and input voltage of mid-point flying capacitors is carried out by three different types of position modifiers, namely, part of the scheme. Reduced operating voltage makes it possible to use the introduction of MOSFET with low block voltage. This method reduces conduction and switching losses, which can increase the power density.

1.3 BASIC PRINCIPLE

A two-direction isolated AC-DC input state that allows phase charging and feedback power in standard storage systems, and a directional high power DC-DC converter system for high-speed charging EVs. DC-DC converter system for high speed charging of electric vehicles. Unlike intermediate battery storage systems, power is provided for high-speed charging, thereby avoiding grid power pulses. Therefore, batteries should be used to deliver long-lasting energy at low to medium power levels, while SC supports fast explosive discharges. To use the SC battery to relieve stress, it is important to fully utilize the battery and the compatibility between the SC and properly divide the demand power.

II. LITERATURE SURVEY

Energy storage battery is a major problem in hybrid electric vehicles (HEVs) such as electric vehicles (EVs) or traction applications. [1].Benefits of lithium-ion battery (BT) / super capacitor (SC) hybrid system (HESS) electric vehicle (EV) compared to BT's only EV[2].BT / SC HESS is using two devices (BT's high energy content and SC's high power density). Simulation is an important step in the

analysis and design of advanced automotive power trains[3].Today, electric vehicles are needed, and advances in their fields are needed to improve the performance of vehicles on a variety of cards.[4].The predicted information and its incorrect combination are then used for power distribution [5].Due to rotational motion and tidal waves, the ocean's electric propulsion system and torque exert more force with its driver's shaft fluctuating [6].Combining high power source with lithium ion batteries for super capacitors results in performance improvements, high performance, longevity, low weight design and relatively low cost of the overall source. [7].The proposed strategy is based on the dynamic range of battery power based on the energy of the super capacitor [8].The PI active control ring is inserted at the end of each driving cycle to keep the superconductor SOC around its initial value. This is achieved by applying energy from the brake and / or the main battery source[9].The control parameters of this strategy are defined by the developed hybrid (BSO-NM) optimization algorithm in offline calculation[10].

III. PROPOSED SYSTEM

The simple combination of the battery unit (BU) and the ultra-capacitor unit (UC) is obtained by the direct coupling of the two units across the DC bus. This topology is easy to implement and low cost as there is no DC / DC converter and controller. However, in this configuration, the U.C. The UC cannot be fully utilized as the voltage is bound by the battery voltage. The partially truncated HESS topology is equipped with a DC / DC converter interface BU and UC. Dc / Dc converter interface can be used to access the DC. Compared to the case where both BU and UC are connected to the bus, this solution results in lower weight and smaller size, Or BU or UC connected directly to the DC bus.However, in this case, the BU is exposed to rapid changes in charge / discharge currents resulting from rapid changes in torque and drag motor power. To overcome the drawbacks of this topology, the somewhat disconnected HESS topology UC is directly connected to the DC bus and the BU placed behind a DC / DC converter is shown in the figure below. 1. Selected for this article. In this configuration, the BU is protected by proper control of the DC / DC converter. A small amount of converters are used with the BU connected directly to the DC bus and the UC is placed behind the DC / DC converter. In a fully disconnected configuration, the DC bus voltage is the result of immune fluctuations for both BU and UC, and is connected to the DC bus via a dedicated DC / DC converter. The use of two DC / DC converters makes this solution economically geeky.

A particular DC-DC converter may require a high voltage (HV) DC integrated powertrain connection. For batteries such as SC and bilateral electricity, a bilateral DC-DC converter is necessary to absorb the regenerative braking energy, thereby increasing the overall efficiency of the system. However, these two directional sources have different requirements for coupled DC-DC converters. For example, (SCS) requires fast and dynamic control of the converter to avoid mismatch operations due to its fast charging and exhaust capabilities. A DC-DC converter with smaller passive components is preferred, and when the power mode is reduced to charging mode and exhaust mode, this is usually the interval between a few microseconds.

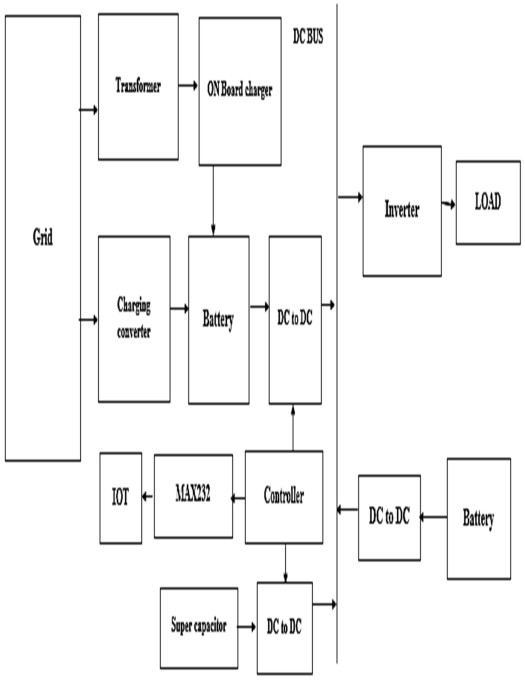

Figure:1 Proposed Block Diagram

3.1 TRANSFORMER

We have a major reason for the AC voltage in our homes and workplaces. Other uses of the current, one of the convenient voltages developed for the convenience of high voltage AC power supply is due to the replacement (transformer name), which then has a long distribution advantage across the country. The irritating distance in the form of rails and cables on the national grid. This is because the same power used to divide the upper voltage into a higher supply voltage indicates a lower current, thus reducing the network grid R loss with the cable. This high AC transmission voltage and current is a low, convertible, safe, usable voltage that is used to supply electrical equipment in our homes and workplaces.

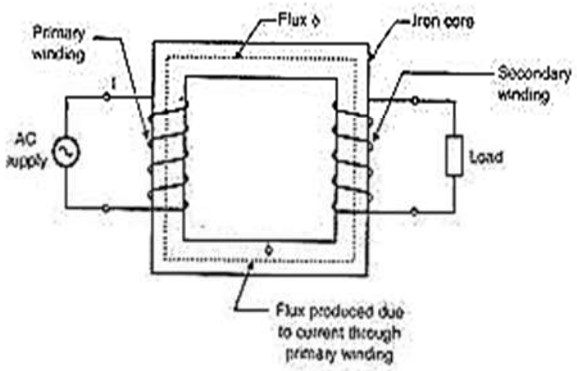

Figure 2: A Typical Voltage Transformer

3.2 DC TO DC CONVERTER

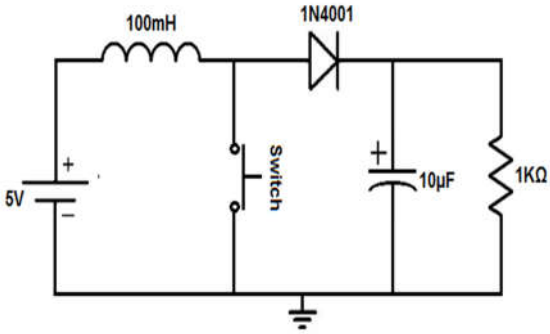

Figure 3: DC to DC Converter Operating Principle and Functionality

A DC-DC converter can accept a DC input voltage and is a power electronic device that supplies DC output voltage. The DC output voltage of the DC converter may be greater than or equal to the input voltage. The converter voltage is used to match the power required to drive the load. Connected and disconnected loads can be controlled by a circuit switch, which allows for simple DC to DC control. The DC-DC converter circuit includes a transistor or diode switch, a power storage device such as an inductor or capacitor, and these converters can be used as a commonly used or linear voltage regulator to switch to a voltage regulator. DC converters are used to supply DC power to DC power sources, standard DC power sources, and predictive electronic circuits.

In DC to DC converter, the converter operates in two modes:

- Continuous Conduction Mode
- Discontinuous Conduction Mode

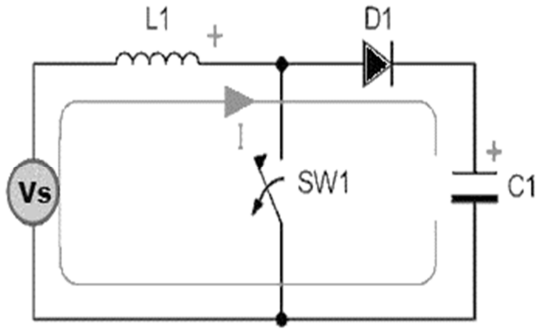

Figure 4:DC to DC Boost Converter Continuous Conduction Mode Circuit

A DC to DC boost converter circuit is a circuit, an inductor, a capacitor, a device, a diode and an input voltage source. The circuit switch is controlled by using the Pulse Width Modulator (PWM). If this switch is turned on, a power trigger will be generated so that it provides more output power.

The components shown in the intermittent conduction mode of the DC-to-DC boost converter, such as circuit capacitors, inductors, voltage sources, diodes, and switching devices, are shown graphically. In this non-stop mode, the power saving element is moved to the trigger if the switch is turned on. If the switch is used to disable the switch for a period of time, the induced current reaches zero until the next switching period. Therefore, the capacitor charging and discharge depends on the input voltage. However, the output voltage in intermittent conduction mode is less than the output voltage in continuous conduction mode.

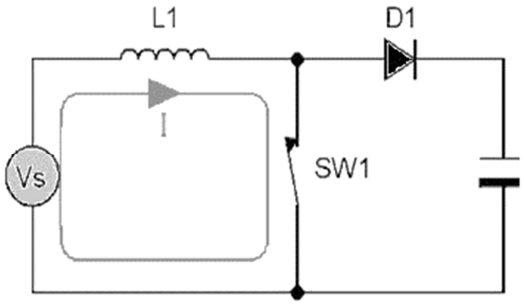

Figure 5: DC to DC Boost Converter Discontinuous Conduction Mode Circuit

3.3 BATTERY

The battery is a self-contained, chemical power pack that can produce a certain amount of power when needed. Unlike normal electric power that begins to control your home by working on tram stops, the battery slowly converts chemical packaging into electricity, which is usually released in days, weeks, months or even years. The basic power unit inside the battery is called a cell, and it has three main bits. Between them are two electrodes (electrical terminals) and electrolyte chemistry. For our convenience and safety, these are usually packed in metal or plastic boxes. There are two relatively simple fluorescent lamp terminals labeled positive (plus) and negative (negative), which are connected to the outside of the electrode. The difference between batteries and batteries is that the batteries are attached to two or more cells, thus adding to their power.

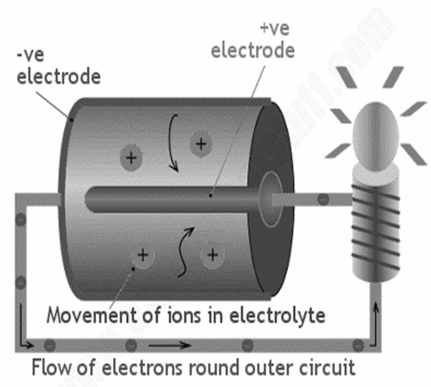

Figure 6: Battery Working Principal

3.4 MAX 232

Maxim's integrated products are designed with a maximum of 232. This IC is widely used in RS 232 communication systems, where the DDL device is compatible with the serial port of the personal computer, and the required voltage changes are reversed. The chip has a charging pump which drives the voltage to the desired level. It can be operated from a single +5 volt power supply and its output can reach + _7.5 volts. The MAX232 comes with a 16-pin DIP and several packages, and it has dual drivers. It can be used as a hardware-level converter to communicate with two systems simultaneously. Maximum 232 is one of the most common purpose integrated circuits used in maximum signal voltage switching problems.

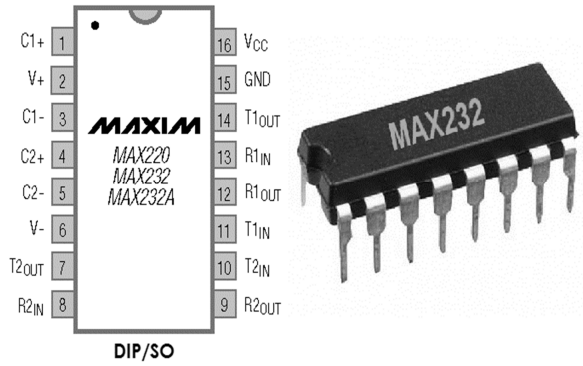

Figure 7: MAX 232 IC PINConfiguration

3.5 INVERTER

An inverter is defined as a small and rectangular power device used to convert direct current (DC) voltage to alternating current (AC) voltage. The use of DC involves many small types of equipment such as solar power systems. DC current is used in many small electrical devices, such as solar power systems, electric batteries, power sources, fuel cells, because they simply generate DC current. The basic function of the inverter is to convert DC power to AC power.

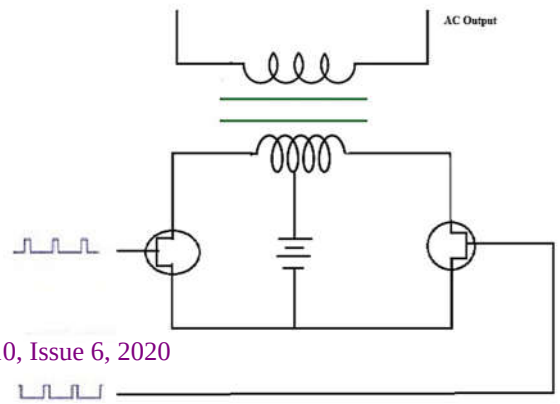

Figure 8: Inverter Circuit Diagram

3.6 CONTROLLER

PIC is a microcontroller, developed in 1993 by a general purpose tool microcontroller. It is controlled by software designed to perform different tasks and control generation. PIC microcontrollers are used in a variety of new applications such as smartphones, audio accessories and advanced medical equipment.There are many Pacifica on the market, from PIC16F84 to PIC16C84. These types of pictures are cheap flash photos.



Figure 9: PIC Microcontroller

3.7 SUPER CAPACITOR

Super capacitors (or super capacitors) differ from ordinary capacitors in two important ways: the company's team is actually a large area, the distance between them is very small, and in the partition between them, they cooperate with traditional media in some other way. Although the terms "super

capacitor" and "super capacitor" are often used interchangeably, there is one difference: they usually have different structures and structures with slightly different structures, so they have different energies.

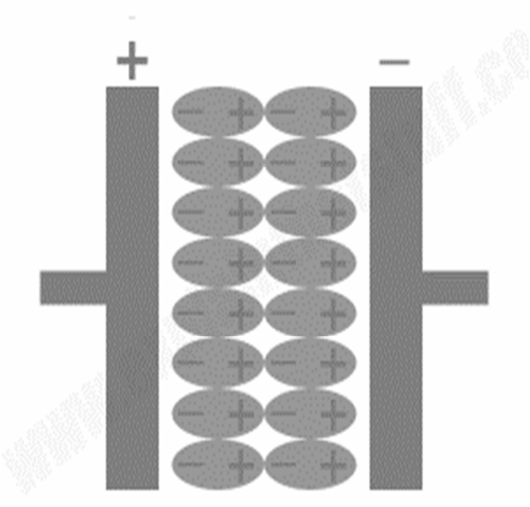

Figure 10: Super Capacitor Circuit

For the purposes of this brief introduction, we assume that they are the same. Just like a normal capacitor, a super capacitor has two boards. The plate is made of metal and coated with porous materials such as powder and activated carbon, creating large areas for high charges. In super capacitors, there is no electricity. Instead, both plates are submerged in an electrolyte and separated by a very thin insulator (they can be made of carbon, paper or plastic).When the board is charged, it forms in the form of opposite charges on either side of the separator, called the electric double layer, which can be a single molecule thick (in the case of conventional capacitors of a few microns in thickness, millimeters or more). This is why super capacitors are often called electric double layer capacitors (also called electric double layer capacitors or electric double layer capacitors). If you look at the image below in the artwork, a super capacitor will look like two ordinary condensers.

3.8 IoT (Internet of Things)

In short, the concept of connecting any device (as long as there is an on / off switch) to the Internet and other connected devices is IOT. The Internet of Things is a network of people connected to giants all of which collect and share data about how to use them and the surrounding environment. From smart microwave ovens, self-driving cars to self-catering to timely automation, its advanced sensors and their tracked objects, wearable fitness equipment, the number of steps you take a day to measure your heart rate, and then use this information-appropriate exercise program There are also indications of how far and how fast you can throw football players registered for use in future training purposes.

3.9 MOTOR

An electric motor is a device that converts electrical energy into mechanical energy. There are three main types of motors.

- DC Motor.
- Induction motor.
- Coherent motor.

All these cars are more or less the same. The operation of electric motors mainly depends on the interactions of the magnetic field and current. Now we will discuss the basic operating principle of each motor to better understand the problem.

The operating principle of DC motors relies mainly on Fleming's left-hand rule. A basic DC motor with an armature placed between the poles. When the armature winding is supplied by an external DC power source, the current flowing through the armature conductor begins. When a magnetic field carries current as a conductor, it is

affected by force and tends to rotate the armature. The N pole of the field magnet is the armature conductor, which is currently down (diagonal) and carries the S pole (point) upstream.

In the case of the induction motor, the motor operates slightly differently than a DC motor. In a single-phase induction motor, when a single-phase current is supplied to the stator torque, a vibrating magnetic field is created to produce the rotating magnetic field, and in a three-phase induction motor, three-phase power is supplied to the three-phase stator torque. The rotor of the induction motor can be either a torque type or a squirrel type. Regardless of the type of rotor, the conductor on it is at the end of the short circuit to create a closed ring. Due to the rotating magnetic field, the magnetic flux crosses the surfaces of the rotor and stator, scanning the air gap between the rotors, thus cutting the rotor conductor.

IV RESULT AND DISCUSSION

4.1

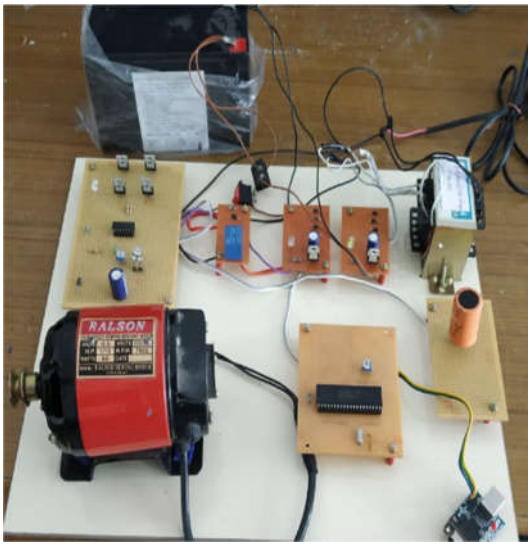

Figure 7: Hardware Output

- Design of controllers and optimization of gains at both converter stations according to transmission of active and reactive power flow in either direction is also part of the scope.
- Detailed studies has to carry out regarding independent control of active and reactive power at sending and receiving ends which can be achieved.
- Voltage of the converter varies with several parameters such as- change in input voltage changes output voltage of the converter and as the load demand changes then also the output voltage changes.
- So output voltage has to be controlled for efficient operation of the network.

4.2 CIRCUIT DIAGRAM

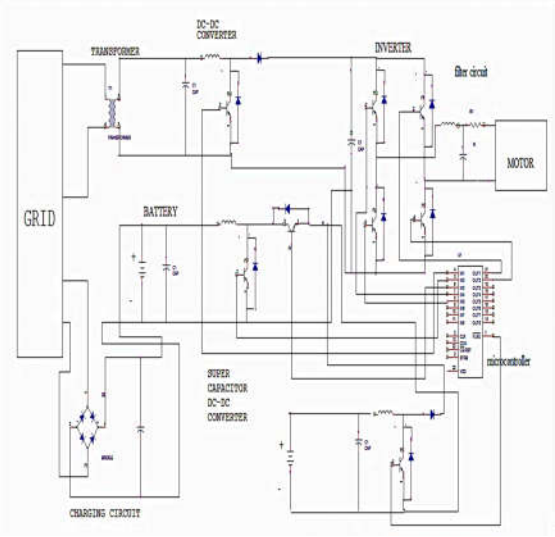

Figure 8: Circuit diagram

- The power supply circuit consists of step down transformer which is 230v step down to 12v.
- In this circuit 4diodes are used to form bridge rectifier which delivers pulsating dc voltage & then fed to capacitor filter the output voltage from rectifier is fed to filter, this 5V DC is used to supply power to the controller.
- Battery DC output is converted to an AC using a DC AC inverter after bucked or increased demand. An inverter function must change the DC input voltage as desired voltage and voltage as an asymmetric AC output voltage.

- The best inverter's output voltage should be the sine curve for waveforms. However, practical inverters have a non-wavelength signal and some synchronization.

- Low cost
- Low power consumption
- Reduce Harmonics distortion
- Output can good efficiency.
- Capacitor charging capacity will improve

4.4 SYSTEM ANALYSIS

One way to monitor energy usage throughout the day, and to directly control energy use, is to reduce it where appropriate. It provides real-time insight into the energy used there; this is equivalent to the corresponding carbon. The system uses flexible and innovative energy control based on rules to help reduce energy costs.

V.CONCLUSION

The state of the art reviews, which include the design and evaluation of future trends, include the converter topology of PEV and PHEV power systems and the DC-DC converter topology. Evaluation provides a number of performance characteristics at a center, such as output power, number of components, switching frequency, electromagnetic interference (EMI), loss of function, cost, and reliability, which directly affects the performance of a particular DC-DC converter. Selection for each BEV and PHEV Power Train. To overcome this, the topology of the soft-switching DC-DC converter is used. Usually, the boost converter loss is caused by hard switching, but in a smooth switching configuration, the switching loss is eliminated by forcing the voltage or current to zero during the switch.

VI. REFERENCES

1) Elwarfalli, H., Muntaser, A., Kumar, J., & Subramanyam, G. (2016), “Design and implementation of PI controller for the hybrid energy system” IEEE National Aerospace and Electronics Conference (NAECON) and Ohio Innovation Summit (OIS).
2) Peng, X., Shuhai, Q., & Changjun, X. (2017), "Simulation of a Li-ion battery/supercapacitor hybrid system for electric vehicle based on secondary development of ADVISOR," First International Conference on Electronics Instrumentation & Information Systems (EIIS).
3) Kachhwaha, A., Shah, V. A., & Shimin, V. V. (2016), "Integration methodology of ultra-capacitor-battery based hybrid energy storage system for electric vehicle power management," IEEE 7th Power India International Conference (PIICON).
4) Zhang, Q., Deng, W., & Li, G. (2018), "Stochastic Control of Predictive Power Management for Battery/ Supercapacitor Hybrid Energy Storage Systems of Electric Vehicles," IEEE Transactions on Industrial Informatics.
5) Hou, J., Sun, J., & Hofmann, H. F. (2018), "Mitigating Power Fluctuations in Electric Ship Propulsion with Hybrid Energy Storage System: Design and Analysis," IEEE Journal of Oceanic Engineering
6) Mesbahi, T., Rizoug, N., Bartholomeus, P., Sadoun, R., Khenfri, F., & Lemoigne, Philippe.

(2017), “Optimal Energy Management For a Li-Ion Battery/Supercapacitor Hybrid Energy Storage System Based on Particle Swarm Optimization Incorporating Nelder-Mead Simplex Approach," IEEE Transactions on Intelligent Vehicles.

7) Ruiz-Cortes, M., Romero-Cadaval, E., Roncero-Clemente, C., Barrero-Gonzalez, F., & Gonzalez-Romera, E. (2017), “Energy management strategy to coordinate batteries and ultra-capacitors of a hybrid energy storage system in a residential prosumer installation," International Young Engineers Forum (YEF-ECE).
8) Lashway, C. R., Elsayed, A., & Mohammed, O. (2016), "Management scheme for parallel-connected hybrid energy storage in electric vehicles," IEEE Power and Energy Society General Meeting (PESGM).
9) Zamani, M., Nagrial, M., Rizk, J., & Hellany, A. (2018), "Electric Vehicles Charging: Review of Current Status," Australasian Universities Power Engineering Conference (AUPEC).
10) Permana, D. A., Sholahuddin, U., Hamdani, D., & Rachmildha, T. D. (2018). Study of Supercapacitor Utilization on Regenerative Braking System: Design and Simulation. 2018 5th International Conference on Electric Vehicular Technology (ICEVT).