SIMULATION OF HYBRID POWER CONDITIONER FOR SUPPRESSING HARMONICS AND NEUTRAL-LINE CURRENT IN THREE-PHASE FOUR-WIRE DISTRIBUTION POWER SYSTEMS

***Mayurdhvajsinh N. Jetavat[1], Dr. V.R Patel[2]**
[1]*M.E Scholar,* [2]*Associate Professor*
[1,2]*Department of Electrical Engineering*
[1,2]*L.D. College of Engineering, Ahmedabad, Gujarat, India*
[1]*mayurdhvaj333@gmail.com*,* [2]*vardhaman31572@gmail.com*

Abstract: *With the development of the urban power grid, the insufficient transmission capacity on key transmission section and the restrictions on building new transmission channels have become a common problem. As the latest generation of Flexible AC Transmission System (FACTS) devices, UPQC provides an effective method to solve this problem by integrating various flexible control means of FACTS components. In this project a new hybrid power conditioner is proposed for suppressing harmonic currents and neutral-line current in three-phase four-wire distribution power systems. The proposed hybrid power conditioner is composed of a neutral-line current attenuator and a hybrid power filter. The hybrid power filter, configured by a three-phase power converter and a three-phase tuned power filter, is utilized to filter the nonzero-sequence harmonic currents in the three-phase four-wire distribution power system.*

Keywords: **Power quality, FACTS devices.**

1. Introduction

Now recent years, the power system design, high efficiency operation and reliability of the power systems have been considered more than before. The electricity is considered as the backbone for industrial revolution. Today the demand and consumption of electrical energy has increased steadily. To meet this increasing demand very complex interconnected power systems are built. With the development of urban power grid, the insufficient transmission capacity on key transmission section and the restrictions on building new transmission channels have become a common problem. Unified power quality conditioner (UPQC) has been proposed for simultaneously eliminating both types of PQ problems. The UPQC achieves its objectives by integrating series and shunt active power filters (APFs), where both share a common dc link. The shunt APF mitigates current related PQ problems by compensating harmonic and reactive component of load current whereas series APF generates a voltage in series with line to mitigate voltage related PQ problems. Varieties of power conditioning techniques are in use starting from passive filtering to active power conditioning.

Among different new technical options available to improve power quality, Unified Power Quality Conditioner (UPQC) has found to be more promising. It provides an important and flexible alternative to compensate both current as well as voltage disturbances simultaneously by a single unit. It is generally configured with two bi-directional converters connected back to back through an energy storage device. A configuration and control aspect of current source active power filter is also discussed in this paper. Performance of CSI based UPQC is also presented to achieve the above objectives. In recent years Unified Power Quality conditioner (UPQC) is being used as

universal active power conditioning device to mitigate both current as well as voltage harmonics in a polluted power system network. Both voltage source and current source inverter are in use for fabrication of UPQC.

However, the compensation performance of the UPQC largely depends upon the passive filters which are connected between voltage source inverters (VSIs) and point of common coupling (PCC). These passive filters condition the polluted output of VSI containing higher frequency components, and deliver filtered voltage or current at the PCC. Therefore, power conditioning capability together with their cost, weight, and size must be examined before making a decision to justify the passive filter selection. Presently, almost all UPQC topologies use an L type filter at front of shunt VSI to shape injected currents. The L filter uses a bulky inductor, has a low slew rate for reference tracking, and produces large voltage drop which results in higher value of dc link voltage for proper compensation. Hence, in addition to compensation performance, L filter has effect on cost, size, weight, and rating of UPQC. Another issue with UPQC operation is common dc link voltage requirement. When series and shunt APFs operate separately, both require different voltages at the dc bus for required compensation.

2. Power quality

A Power Quality problem can be defined as deviation of magnitude and frequency from the ideal sinusoidal waveform. Good power quality is benefit to the operation of electrical equipment, but poor power quality will produce great harm to the power system. Most of the electronic equipment such as personal computers, telecommunication equipment, microprocessor and micro controller, etc. is responsible for power quality problems. Harmonics are defined as sinusoidal wave form having a frequency equal to an integer multiple of the power system fundamental frequency. It is a component of a periodic waveform. If the fundamental frequency multiple is not an integer, then we are dealing with inter harmonics .Most of the electronic equipment such as personal computers, telecommunication equipment, microprocessors, and microcontrollers etc.; are generally responsible to Power Quality problems. A poor power quality has become a more important issue for both power suppliers and customers. Poor power quality means there is a deviation in the power supply to cause equipment malfunction or may failure.

The definition of power quality is different for the different uses. As per the Institute of Electrical and Electronic Engineers (IEEE) Standard IEEE1100 is “the concept of powering and grounding sensitive electronic equipment in a manner suitable for the equipment.” The effects on load and faulty condition occur in the system create the power quality (PQ) problem. The PQ problems will effect on electrical equipment like transformer, motors, generators and home appliances. A simple definition is that “Power quality is a set of electrical boundaries that allows a piece of equipment to function in its intended manner without significant loss of performance or life expectancy.” The above definition of power quality gives us two functions for electrical devices. The first one is performance and second one is expectancy. This chapter provides information regarding power quality. In this chapter we also discuss about how we can improve the power quality in the system.

The important things which are concerned regarding the power quality are given below:-

(1) Long duration voltage variation: -

Over voltage, under voltage, Sustained Interruption

(2) Short duration voltage variation: -

Interruption, Voltage unbalance, Sag, Swell, harmonics distortion, voltage fluctuation and power frequency variations, etc.

In the electrical system there are two types of loads:-

(1) Linear load: The load in which the voltage and current is related to each other and linearly varies. The examples of linear load are motors, heaters, incandescent lamp, etc.

(2) Nonlinear load: The load in which the voltage and current is not related to each other and their value also not dependent to each other.

The examples of nonlinear loads are Arc furnace, welding, Resistance welding, etc. The nonlinear load uses high-speed electronic power switching devices for A.C to D.C conversion in internal circuits. Due to this harmonics are produced at the point of common coupling and some other problems of heating and line interference are also occurred. The different nonlinear loads which produce power quality problems like waveform distortion, harmonics are PC, fax machines, printers, Drives, UPS, lighting Ballasts etc.

3. Unified power quality conditioner (UPQC)

UPQCs consist of combined series and shunt APFs for simultaneous compensation of voltage and current. The series APF inserts a voltage, which is added at the point of common coupling (PCC) such that the load end voltage remains unaffected by any voltage disturbance, whereas, the shunt APF is most suitable to compensate for load reactive power and unbalance, to eliminate the harmonics from supply current, and to regulate the common DC link voltage.

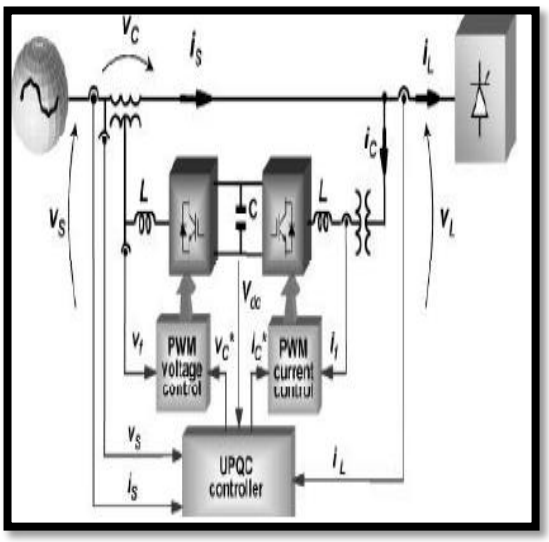

Figure 1. Basic configuration of the UPQC

Figure.1 shows the basic configuration of the UPQC. The UPQC has two distinct parts:-

• Power circuit formed by series and shunt PWM converters
• UPQC controller

The series PWM converter of the UPQC behaves as a controlled voltage source, that is, it behaves as a series APF, whereas the shunt PWM converter behaves as a controlled current source, as a shunt APF. No power supply is connected at the DC link. It contains only a relatively small DC capacitor as a small energy storage element.

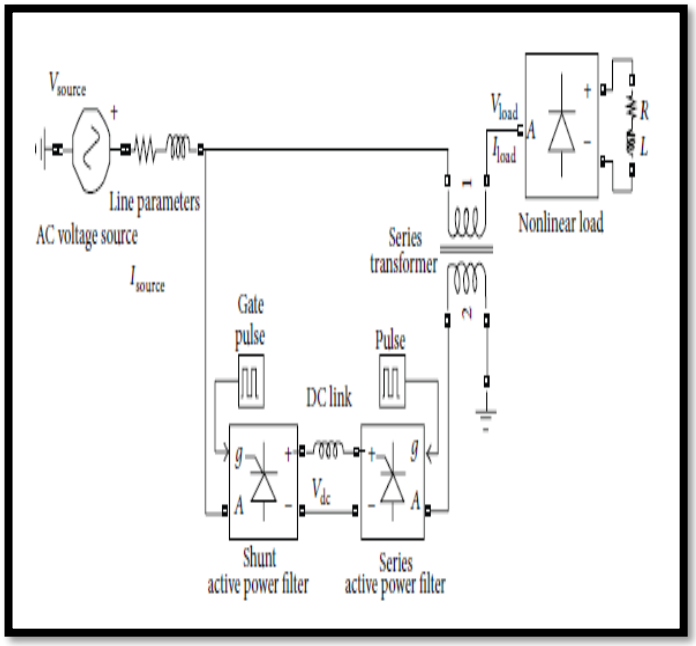

Figure 2. The design configuration of UPQC-CSC

In this, the design configuration is right series and left shunt with the current source converter (CSC). In thesis, UPQC-CSC is designed and analysis of the results has been done. Unified power quality conditioner (UPQC) for nonlinear and voltage sensitive load has following facilities.

It reduces the harmonics in the supply current, so that it can improve utility current quality for nonlinear loads. UPQC provides the VAR requirement of the load, so that the supply voltage and current are always in phase; therefore, no additional power factor correction equipment is required. UPQC maintains load end voltage at the rated value even in the presence of supply voltage sag.

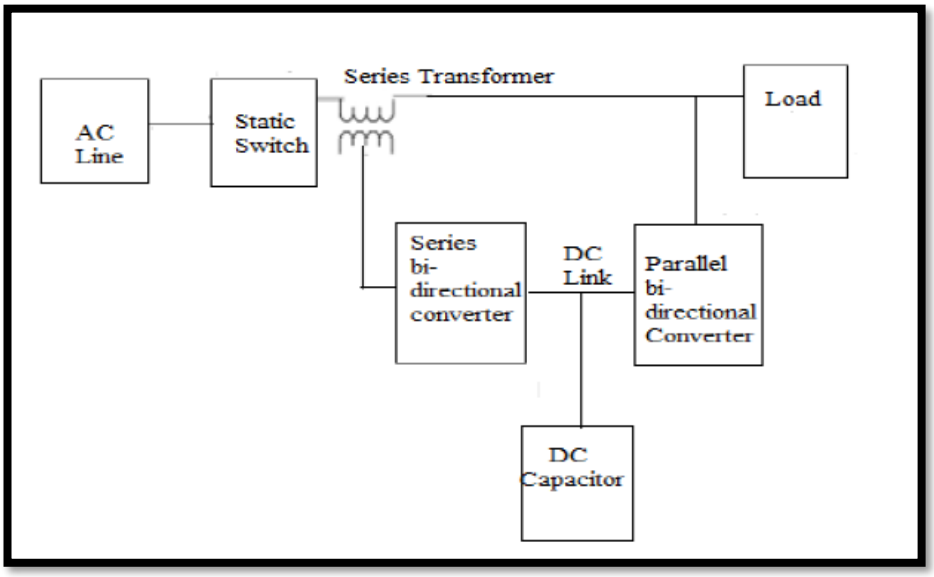

Figure 3. Block diagram of a UPQC

Conventional UPQC topology consists of the integration of two active power filters are connected back to back to a common dc-link bus. A simple block diagram of a typical UPQC is shown in Fig.3. It can be configured either with voltage-source converters or current source converters in single phase, three-phase three wire, or three-phase four-wire configurations. The UPQC with the voltage-source converter (VSC) is most common because of its smaller size and low cost. Despite these previously mentioned advantages, the VSI topology has slow control of the converter (LC filter) output voltage and no short-circuit/over current protection.

When the active rectifier inside the UPQC is used as a power factor corrector, dc bus voltage oscillations appear which makes the control of the series filter output voltage more difficult. The CSI-based UPQC has advantages of excellent current control capability, easy protection, and high reliability over VSI-based UPQC. The main drawback of the CSI-based UPQC has been so far the lack of proper switching devices and large dc-side filter. The new insulated-gate bipolar transistors (IGBTs) with reverse blocking capability are being launched in the markets which are suitable for the CSI-based UPQC. With the use of SMES coils, the size and losses can be reduced considerably. A configuration of UPQC using two current-source converters connected back to back through a large dc-link reactor is shown in fig.4.

The performance of the UPQC mainly depends on how accurately and quickly the reference signals are derived. After efficient extraction of the distorted signal, a suitable dc-link current regulator is used to derive the actual reference signals. A dc current regulator will serve as power-loss compensation in the filter circuits, which will take place through the activation of a shunt unit.

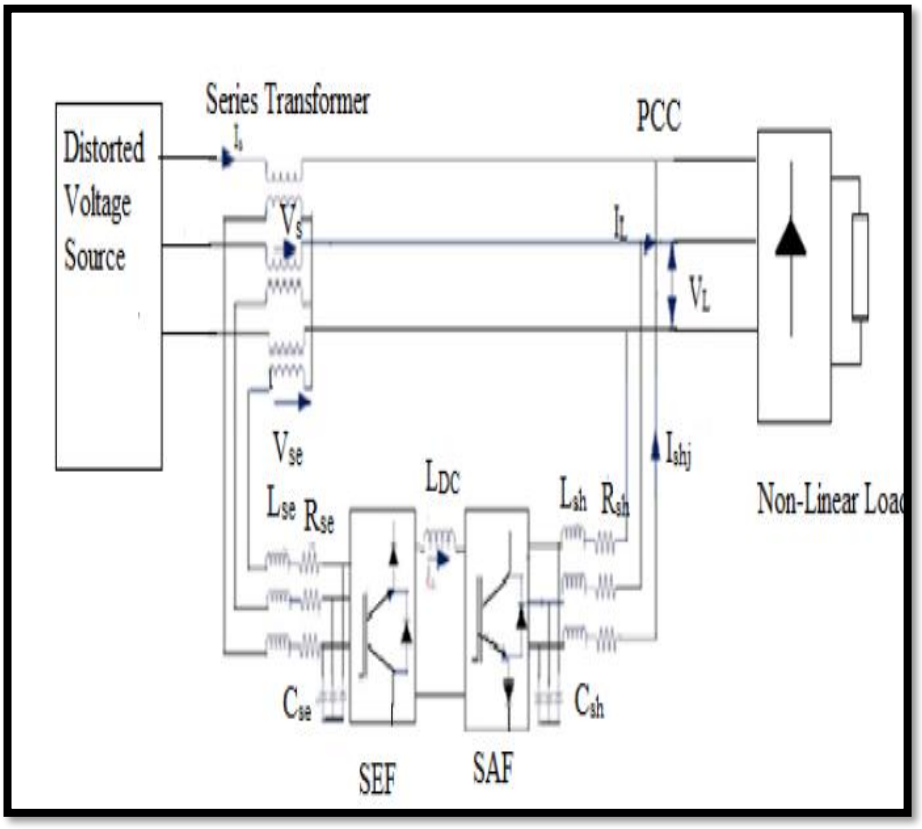

Figure 4. UPQC topology using current-source converters

4. Simulation

In this section we have design a three phase system with D.C load and Non-linear load through Rectifier. Due to that the load side current has been fluctuate and create distortion in the output current or load side current.

A 3-phase system is taken here without considering UPFC which has following simulation data,

- Load type RL and Non-linear load
- Ext. source 3 phase, 11KV, 50Hz

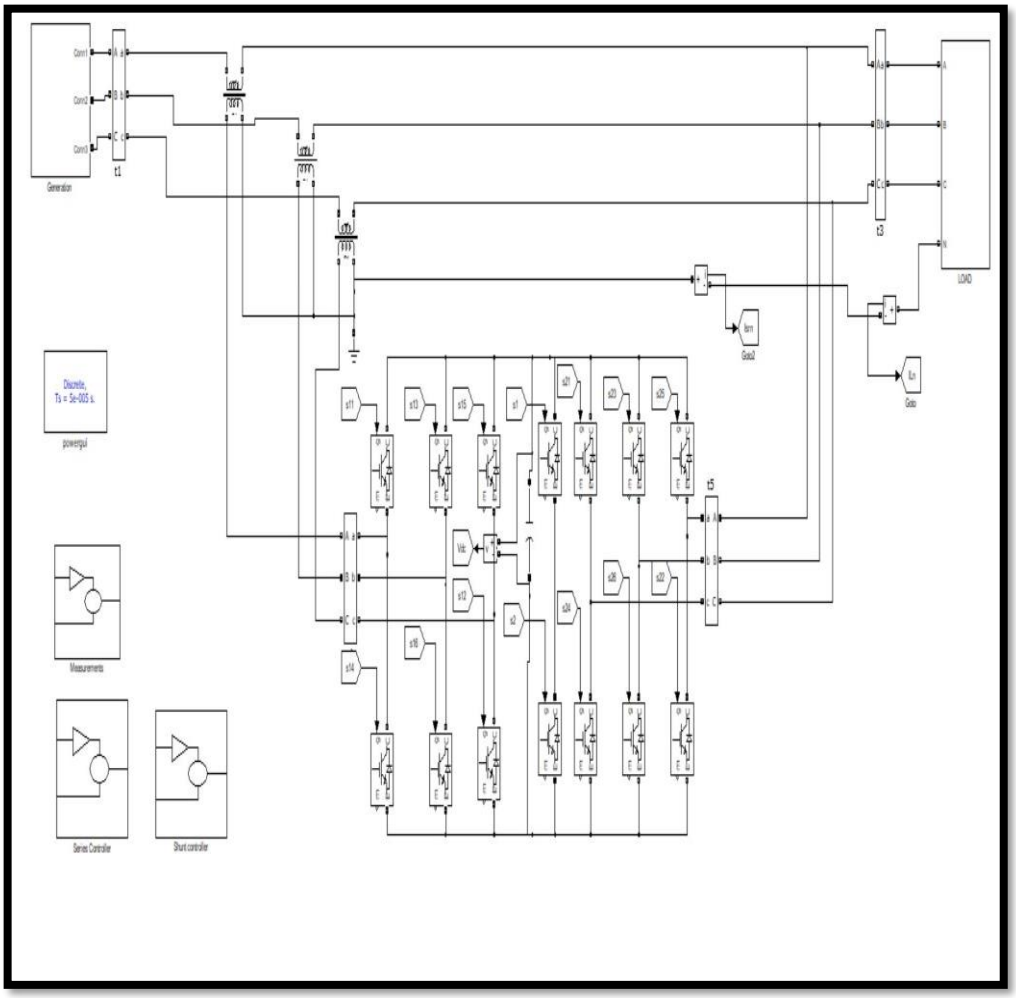

Figure 5. MATLAB Simulation of UPQC with Proposed Controlling

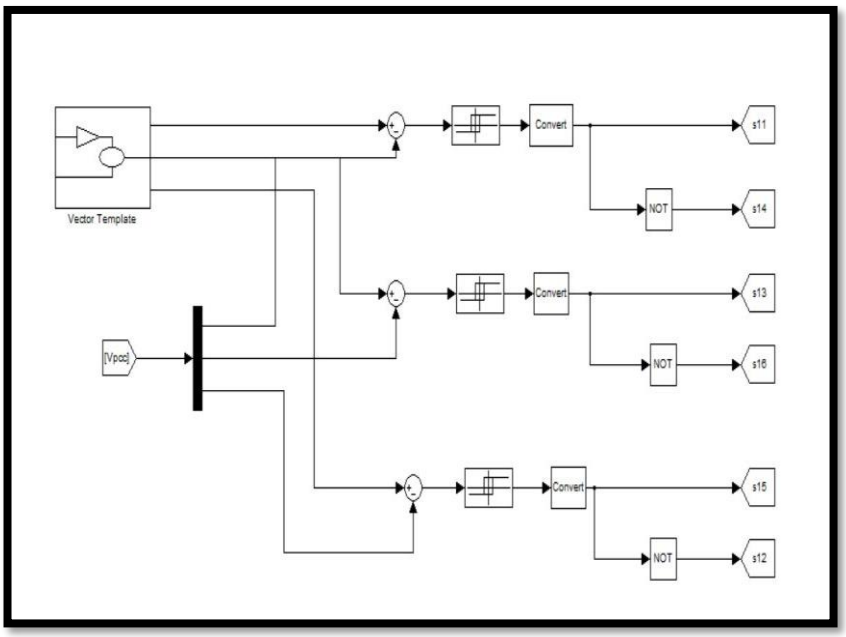

Figure 6. Series VSC control

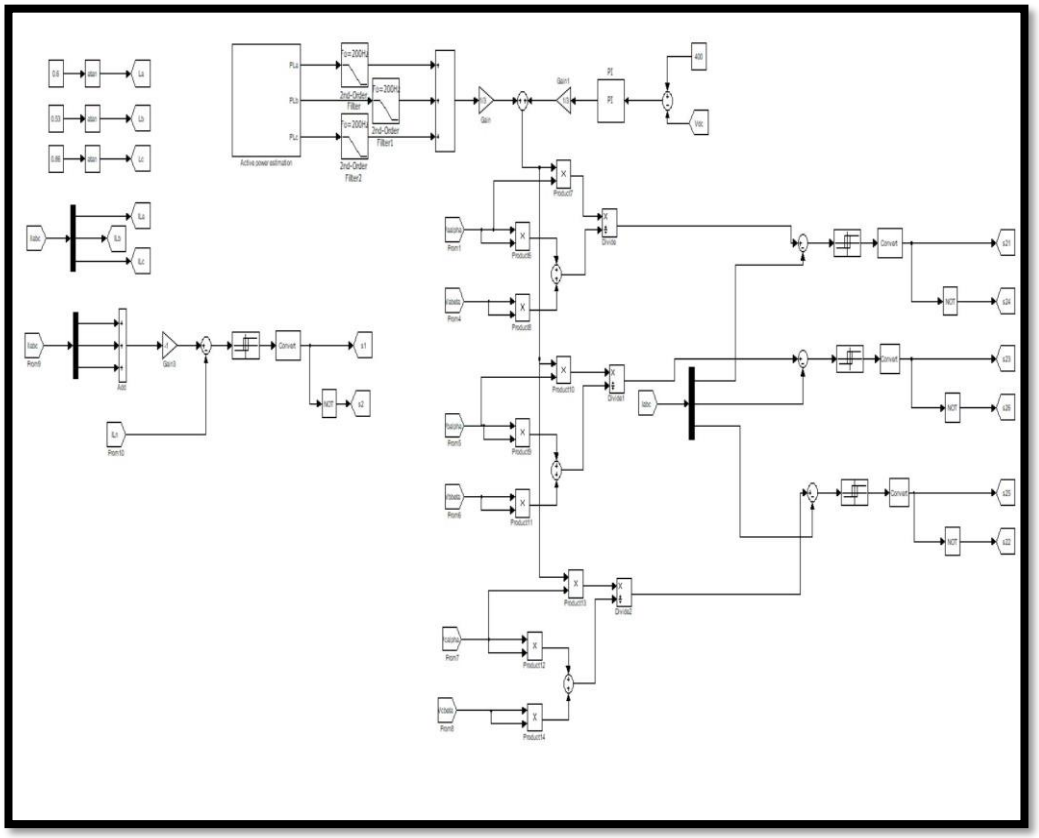

Figure 7. Shunt VSC Controlling

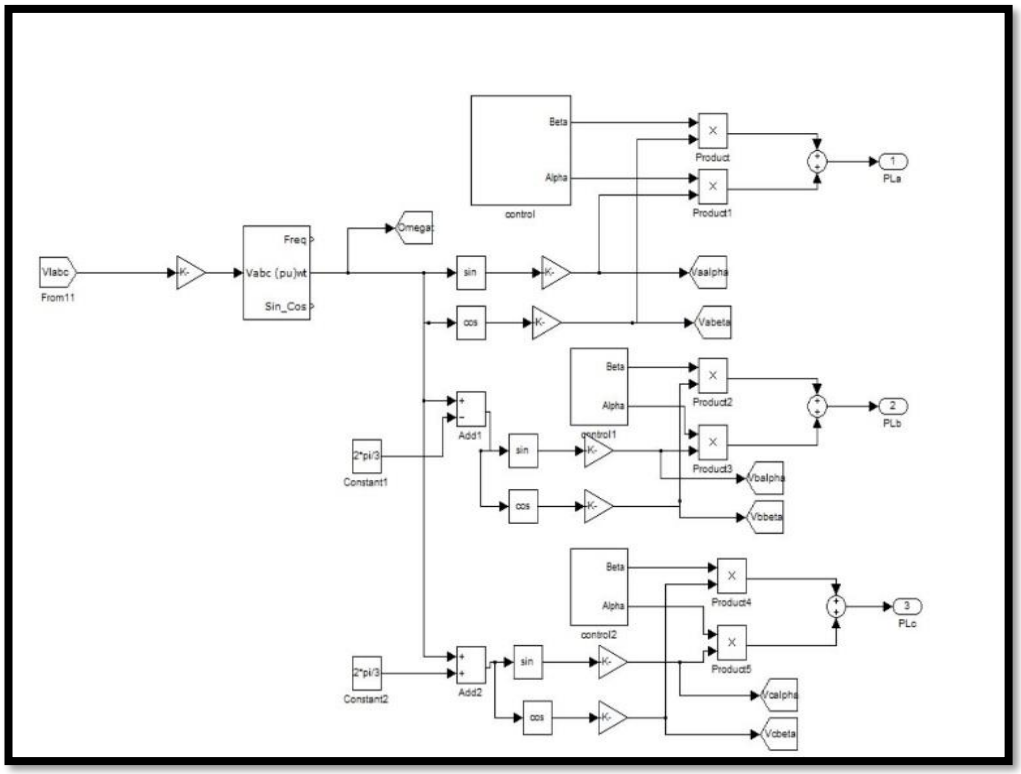

Figure 8. Sliding mode Control subsystem

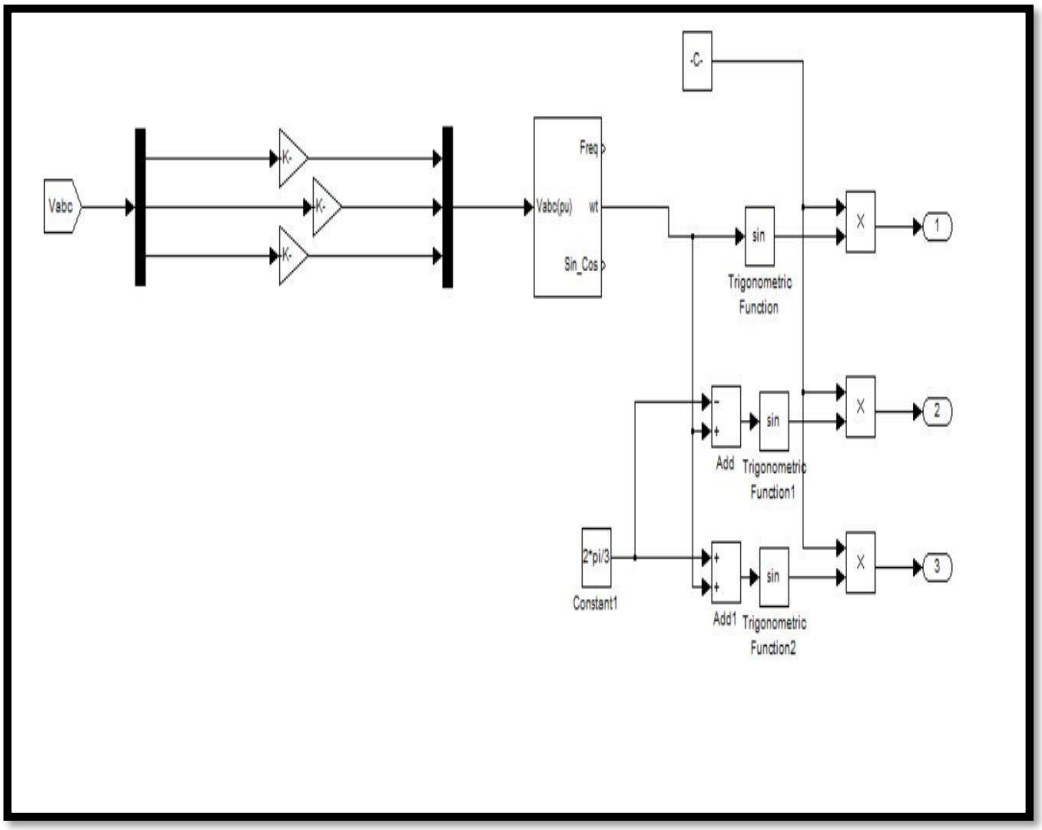

Figure 9. Vector Control logic

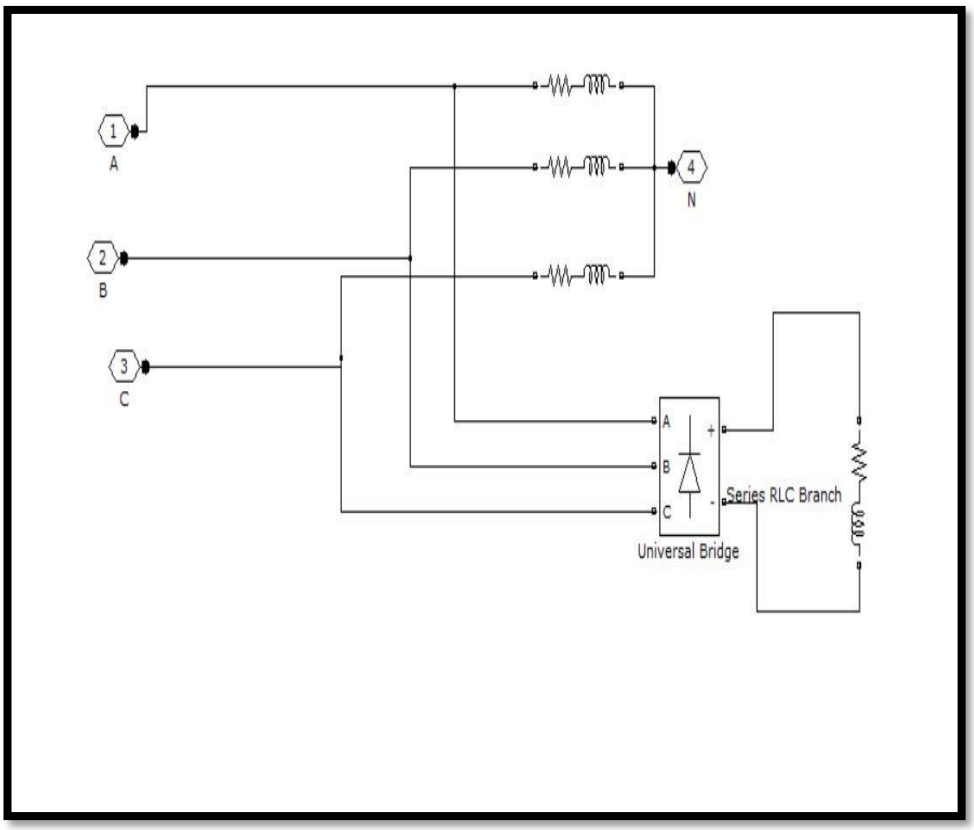

Fig.10: Non Linear Load

5. Results



Figure 11. Source Side Voltage Waveform

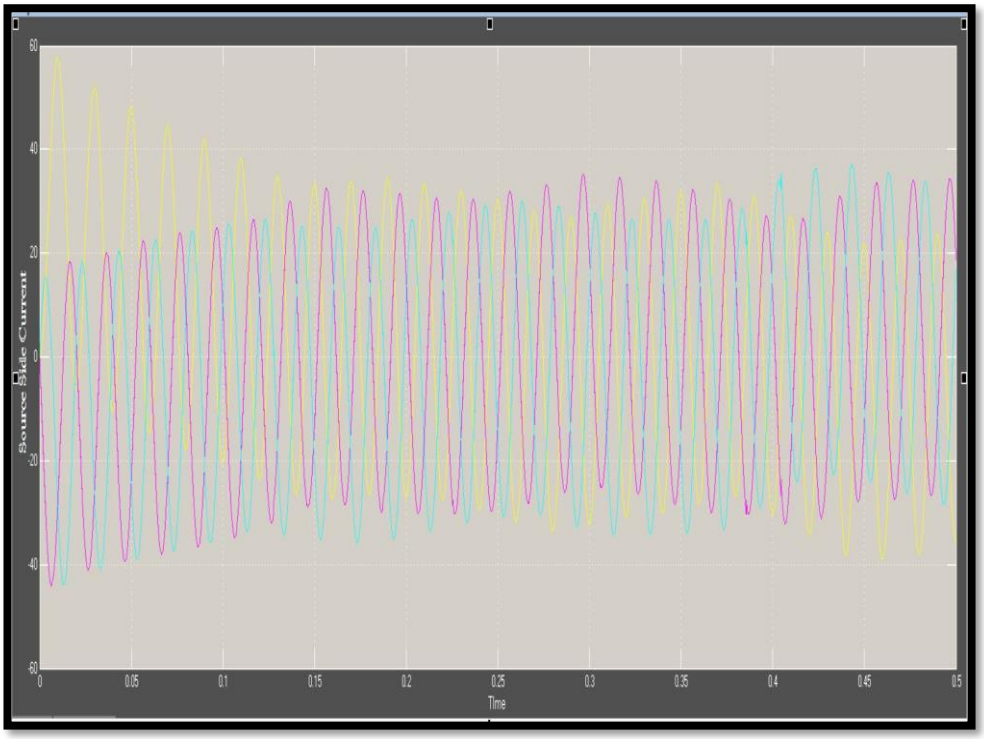

Figure 12. Source Side Current Waveform

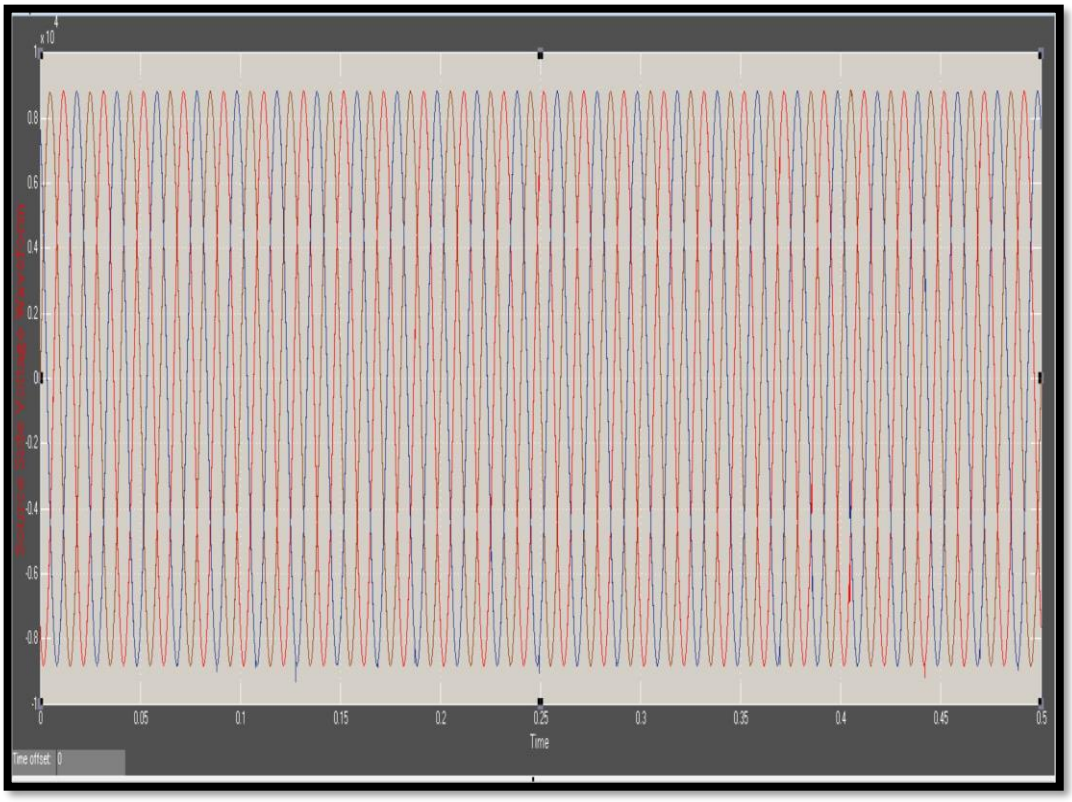

Figure 13. Load Side Voltage Waveform

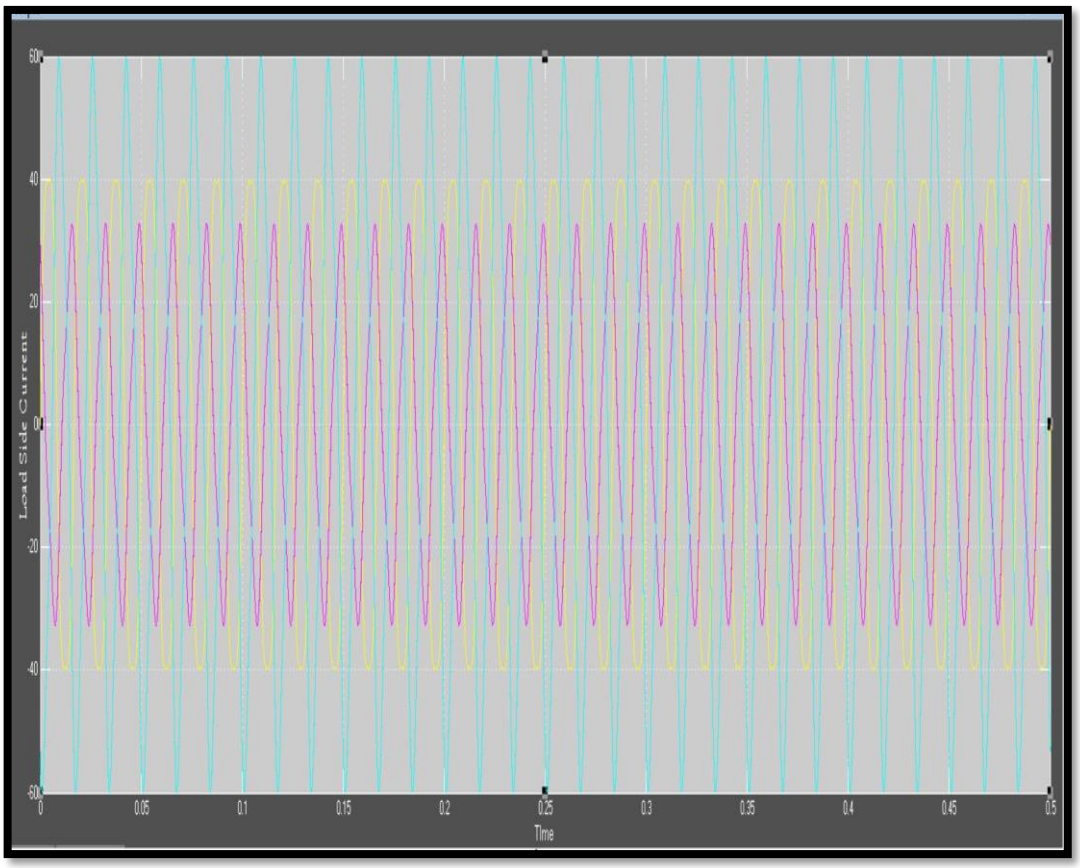

Figure 14. Load Side Current Waveform

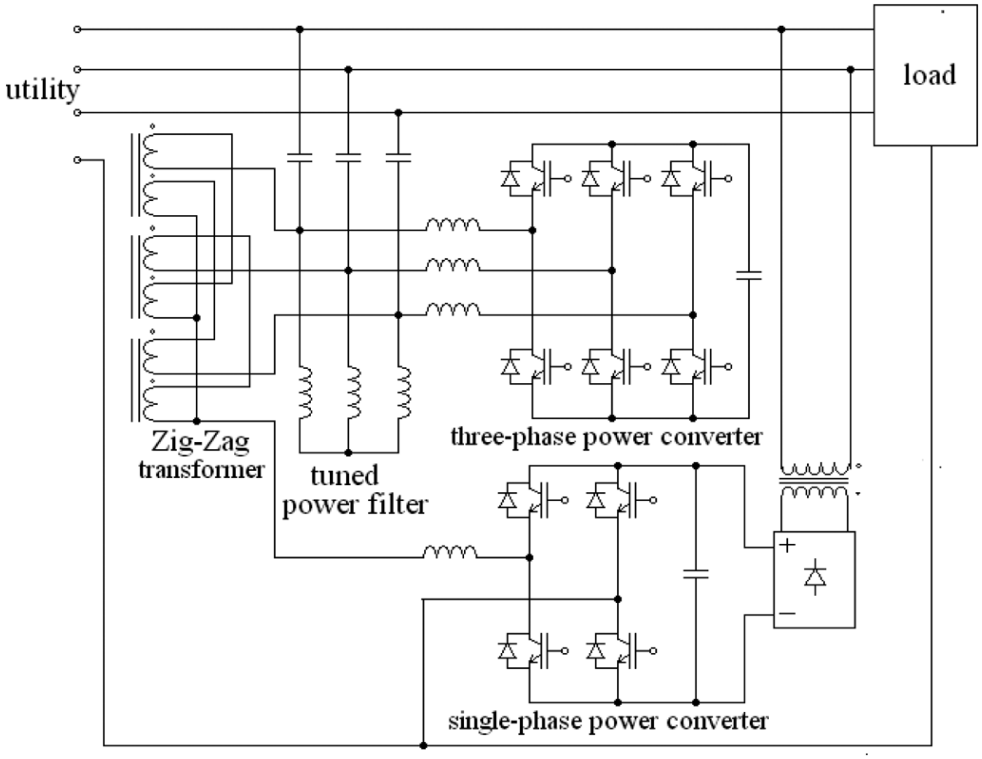

Figure 15. System configuration of the proposed hybrid power conditioner

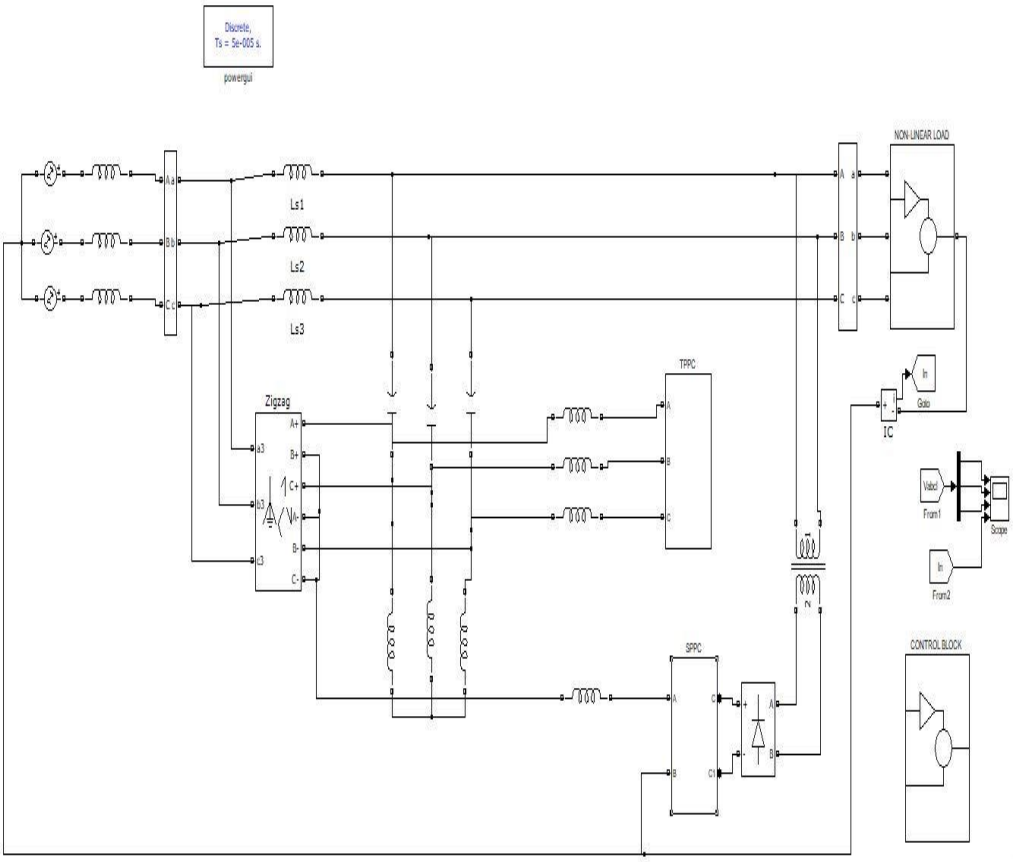

Figure 16. MATLAB Simulation of Proposed System

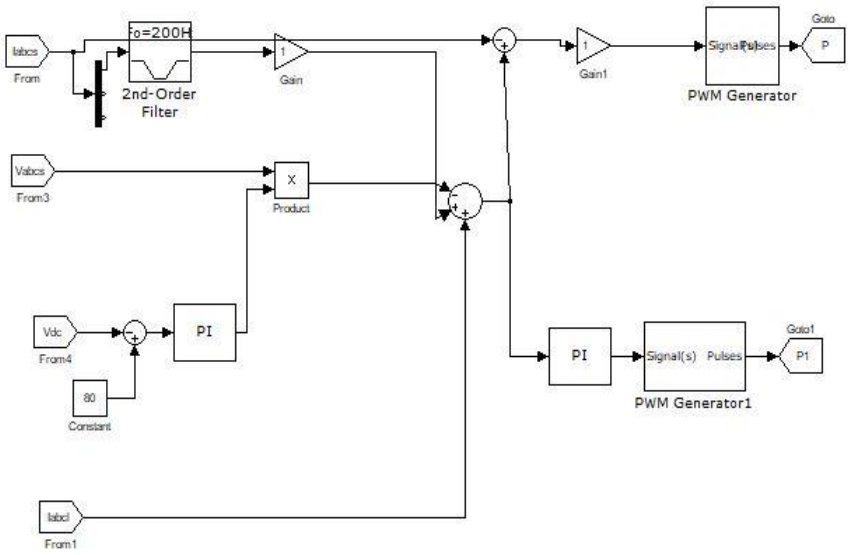

Figure 17. Control block diagram of the three-phase and single-phase power converters

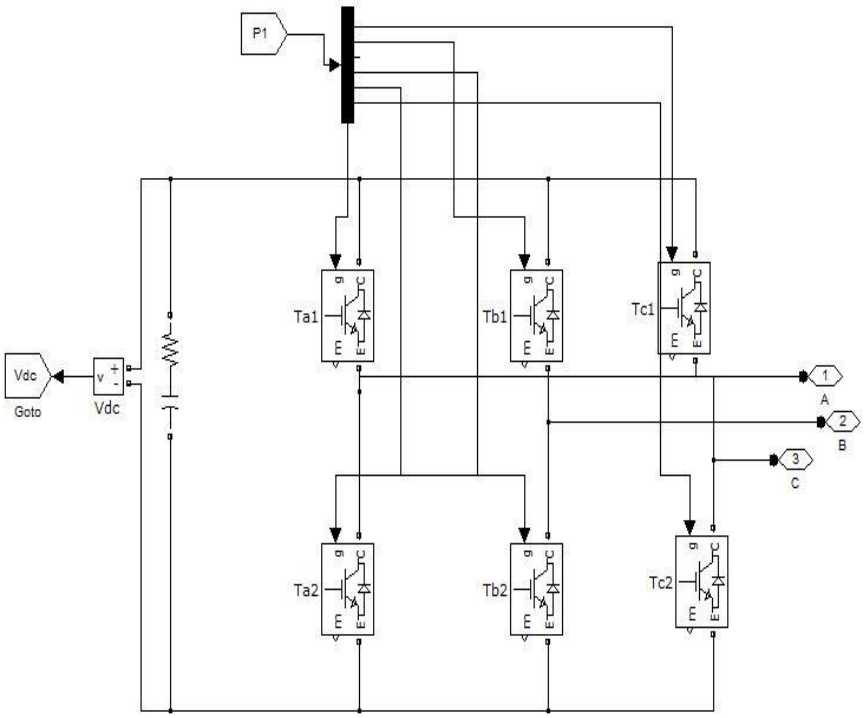

Figure 18. Three Phase Power Converter Matlab subsystem

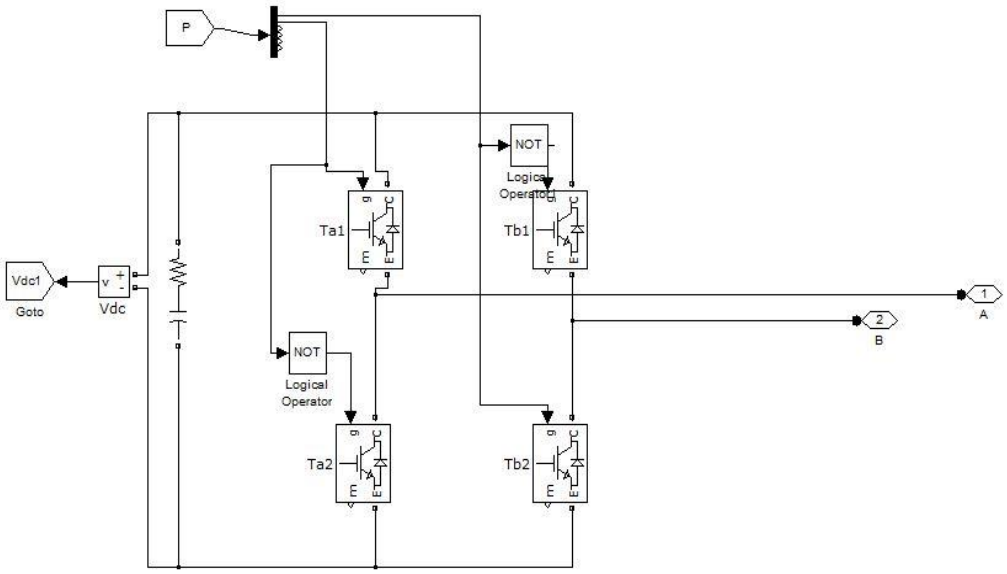

Figure 19. Single Phase Converter MATLAB subsystem

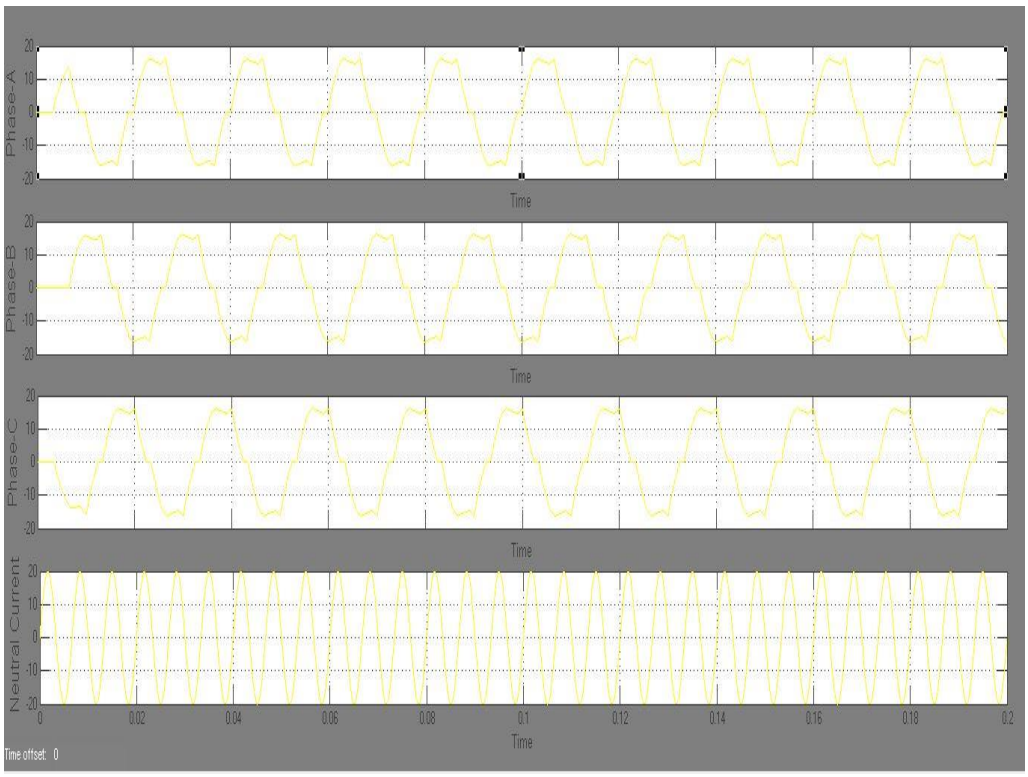

Figure 20. Simulation results of the balanced three-phase load: (a) phase a load current, (b) phase b load current, (c) phase c load current, and (d) neutral line current of load

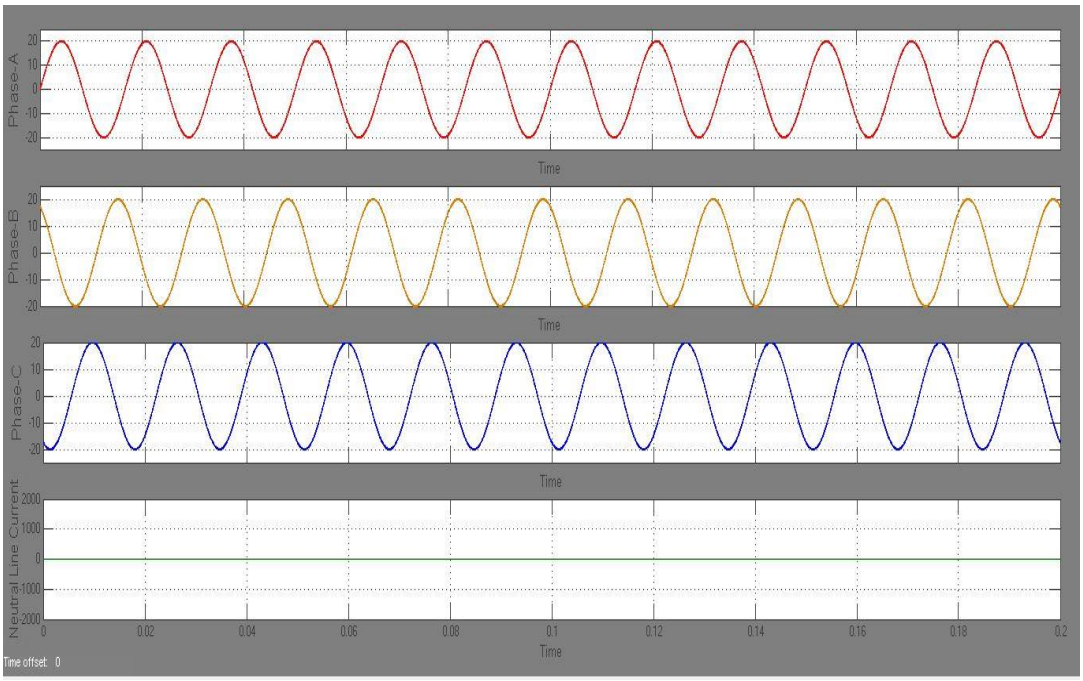

Figure 21. Simulation results of the hybrid power conditioner under the balanced three-phase load: (a) phase a utility current, (b) phase b utility current, (c) phase c utility current, and (d) neutral line current of the utility.

6. Conclusion

This paper showcasing the application of UPQC for Power Quality Enhancement and mitigating the Power Quality Issues. From the simulation results we can say that after the application of UPQC in Three phase system the distortion in voltage, current waveform has been reduced. The power quality is improved using the control strategy of UPQC in Three phase compensated system. The Matlab Simulation of UPQC has been done for voltage and current waveform improvement.

7. Acknowledgement

I wish to thank my guide Dr. V. R. Patel for his inspiration and continuous support. Without his valuable advice and assistance, it would not have been possible for me to attain this landmark. He has always been willingly present whenever I needed the slightest support from him. I would not like to miss a chance to say thanks for the time that spared for me, from his extremely busy schedule.

REFERENCES

[1] Jinn-Chang Wu, Hurng-Liahng Jou, Hsin-Hsing Hsaio, and Shun-Tian Xiao, “A New Hybrid Power Conditioner for Suppressing Harmonics and Neutral-Line Current in Three-Phase Four-Wire Distribution Power Systems”, IEEE TRANSACTIONS ON POWER DELIVERY, VOL. 29, NO. 4, AUGUST 2014

[2] Bhim Singh, P. Jayaprakash, T. R. Somayajulu, and D. P. Kothari,, “Reduced Rating VSC With a Zig-Zag Transformer for Current Compensation in a Three-Phase Four- Wire Distribution System”, IEEE TRANSACTIONS ON POWER DELIVERY, VOL. 24, NO. 1, JANUARY 2009

[3] Hurng-Liahng Jou, Jinn-Chang Wu, Kuen-Der Wu, Wen-Jung Chiang, and Yi-Hsun Chen, “Analysis of Zig-Zag Transformer Applying in the Three-Phase Four-Wire Distribution Power System ”, IEEE TRANSACTIONS ON POWER DELIVERY, VOL. 20, NO. 2, APRIL 2005

[4] Ahmed AbdAlla Hossam-Eldin, Ahmed Abdel Hamid Mansour, Mohammed Elsaid Elgamal, Karim Hassan Youssef, “Simulation Study of the Mitigation of Nonlinear Load Harmonics and Unbalanced Voltage Stabilization using 3-Wires and 4-Wires UPQC”, 2018 Twentieth International Middle East Power Systems Conference (MEPCON), Cairo University, Egypt, 978-1-5386-6654-8/18/ ©2018 IEEE

[5] Muneer V, Jithin Sukumaran , Avik Bhattacharya , “Investigation on Reduced DC Link Voltage Based UPQC for Harmonic Compensation Under Unbalanced Load ”, 2017 IEEE International Conference on Technological Advancements in Power and Energy (TAP Energy), 978-1-5386-4021-0/17/©2017IEEE

[6] Amarendu Behera, Sanjeeb Mohanty, “Power Quality Improvement of a 25 KV Distribution System under 3 Phase Fault using UPQC”, 978-1-5386-4021- 0/17/©2017IEEE

[7] A. Patel and P. Chaturvedi, "Performance of SRF-UVTG based UPQCDG for integration of solar PV with non-linear loads," 2016 IEEE International Conference on Power Electronics, Drives and Energy Systems (PEDES), Trivandrum, 2016

[8] H. R. Baghaee, M. Mirsalim, G. B. Gharehpetan, and H.A. Talebi, “Nonlinear Load Sharing and Voltage Compensation of Micro grids Based on Harmonic Power-Flow Calculations Using Radial Basis Function Neural Networks”, *IEEE Systems Journal* , Vol. PP, No. 99, pp.1 – 11, 16 January 2017

[9] N. M. Dehkordi, N. Sadati and M. Hamzeh, “A back stepping high-order sliding mode voltage control strategy for an islanded micro grid with harmonic/inter-harmonic loads”, *Control Engineering Practice*, Vol. 58, pp.150-160, January 2017