A REVIEW ON VOLTAGE SOURCE INVERTERS CONTROL BY SVPWM/PWM FOR MODIFIABLE SPEED DRIVE APPLICATIONS

Binod Kumar Yadav[1], Vivek Kumar Yadav[2]
[1]M.Tech Scholar, [2]Assistant Professor
Department of Electrical Engineering
SRK University, Bhopal, Madhya Pradesh, India
[1]marbaitabinod@gmail.com, [2]vivekyadav.1185@gmail.com

Abstract: *This research paper reveals the study of Pulse Width Modulation (PWM) changeable speed drives are progressively more applied in numerous novel industrialized applications that necessitate greater enactment. In recent times, progresses in PE (Power Electronics) and semiconductor technology have lead enhancements in PE (Power Electronics) schemes. Henceforth, dissimilar circuit configurations specifically multilevel inverters have turn into widespread and significant curiosity by investigator are specified on them. Adaptable voltage and frequency supply to A.C. drives is invariably achieved from a 3-phase VSI (Voltage Source Inverter). Numerous PWM (Pulse Width Modulation) systems are used to achieve adaptable voltage and frequency supply. The furthermost broadly used PWM (Pulse Width Modulation) systems for 3-phase VSI's (Voltage Source Inverters) are carrier-based SVPWM (Space Vector Pulse Width Modulation) and sinusoidal PWM (Pulse Width Modulation). There is an emergent propensity of using SVPWM (Space Vector Pulse Width Modulation) owing to their tranquil digital realization and better-quality D.C. bus utilization.*

Keywords: *CSI (Current Source Inverter), VSI (Voltage Source Inverter), SVPWM (Space Vector Pulse Width Modulation), PWM (Pulse Width Modulation).*

1. Introduction

3-phase Voltage-Fed PWM (Pulse Width Modulation) inverters are in contemporary times revealing increasing eminence for multi-megawatt industrialized drive applications. The leading reasons for this eminence are tranquil sharing of massive voltage amid series devices and enrichment of harmonic excellence at output as equated to a 2-level inverter. In lesser culmination of power, GTO (Gate Turn-Off Thyristor) devices are being substituted by IGBTs (Insulated-Gate Bipolar Transistors) owing to their rapid development in current and voltage ratings and higher switching frequency. The SVPWM (Space Vector Pulse Width Modulation) of a 3-level inverter gives supplementary assistance of more harmonic excellence and superior under-modulation range that spread out modulation factor to 90.7 percent from customary value of 78.5 percent in Sinusoidal PWM (Pulse Width Modulation).

An ASD (Adjustable Speed Drive) is a device used to give continuous range procedure speed control. An ASD (Adjustable Speed Drive) is proficient of amending both torque and speed as of a synchronous motor or induction motor. An electric ASD (Adjustable Speed Drive) is an electrical scheme used to control speed of motor. ASDs (Adjustable Speed Drives) might be mentioned to by various terms, for instance variable speed drives, changeable frequency drives or changeable frequency

inverters. The last 2-terms will merely be used to mention to assured A.C. schemes, as is every so often practice, even though some D.C. drives are as well based on principle of changeable frequency.

Changeable speed drives are maximum effective (98 percent at full load) kinds of drives. They are accustomed control speeds of together D.C. and A.C. motors. They consist of adjustable voltage/frequency A.C. motor controllers for motors (Squirrel-Cage), D.C. machine controllers for D.C. machines, eddy-current clutches for A.C. machines (less effective), wound-rotor machine controllers for wound-rotor A.C. machines (less effective) and cyclo-converter (less effective).

PWM (Pulse Width Modulation) flexible speed drives are progressively applied in numerous novel industrialized applications that have need of greater enactment. In recent times, progresses in PE (Power Electronics) and semiconductor technology have lead progresses in PE (Power Electronic) schemes. Therefore, dissimilar circuit configurations that is to say multilevel inverters have turn into widespread and significant curiosity by investigator are specified on them. Adjustable frequency and voltage supply to A.C. drives is customarily achieved from a 3-phase VSI (Voltage Source Inverter). Several PWM (Pulse Width Modulation) systems are accustomed achieve adjustable frequency and voltage supply. The supreme broadly used PWM (Pulse Width Modulation) systems for 3-phase VSIs (Voltage Source Inverters) are carrier-based sinusoidal PWM (Pulse Width Modulation) and SVPWM (Space Vector Pulse Width Modulation). There is a growing tendency of by means of SVPWM (Space Vector Pulse Width Modulation) due to their tranquil digital realization and improved D.C. bus utilization.

2. Voltage Source Inverters (VSI)

The foremost aim of static power converters is to create an A.C. output wave-form as of a D.C. power supply. These are kinds of wave-forms requisite in ASDs (Adjustable Speed Drives); UPS (Uninterruptible Power Supplies), SVC (Static VAR Compensators), active filters, FACTS (Flexible Alternating Current Transmission System), and Voltage Compensators, which are merely a rare applications. For sinusoidal A.C. outputs, frequency, phase and magnitude must be governable.

Along with kind of A.C. output wave-form, these topologies can be deliberated as VSIs (Voltage Source Inverters), where self-sufficiently controlled A.C. output is a voltage wave-form. These edifices are most generally used since they obviously act as voltage sources as requisite by numerous industrialized applications, for instance ASDs (Adjustable Speed Drives), which are furthermost widespread application of inverters. In the same way, these topologies can be set up as CSIs (Current Source Inverters), where self-sufficiently controlled A.C. output is a current wave-form. These edifices are stagnant broadly used in medium-voltage industrialized applications, where high-grade voltage wave-forms are necessary. Static power converters (specifically inverters) are built from power switches and A.C. output wave-forms are consequently made up of non-continuous values. This hints to generation of wave-forms that feature quick transitions instead of smooth ones.

1-phase VSIs (Voltage Source Inverters) can be set up as full-bridge and half-bridge topologies. Even though power range they concealment is small one, they are broadly used in power supplies, 1-phase UPSs (Uninterruptible Power Supplies), and presently to form intricate high-power static-power topologies, for example, multi-cell conformations.

1-phase VSIs (Voltage Source Inverters) concealment low-range power applications and 3-phase VSIs (Voltage Source Inverters) cover medium-power-to-high-power applications. The foremost tenacity of these topologies is to give a 3-phase voltage source, where amplitude, frequency and phase of voltages must at all times be governable. Even though most of applications necessitate sinusoidal voltage wave-forms (e.g., ASDs (Adjustable Speed Drives), UPSs (Uninterruptible Power Supplies), FACTS (Flexible Alternating Current Transmission System), SVC (Static VAR Compensator), random voltages are as well requisite in some emergent applications (e.g., voltage compensators, active filters).

As in 1-phase VSIs (Voltage Source Inverters), switches of a few leg of inverter (S_1 & S_4, S_3 & S_6, or S_5 & S_2) can't be switched on instantaneously since this would consequence in a short-circuit transversely D.C.-link voltage supply. Correspondingly, so as to evade indeterminate states in VSI

(Voltage Source Inverter), and thus indeterminate A.C. output line voltages, switches of any leg of inverter can't be switched-OFF concurrently as this will consequence in voltages that will be contingent upon corresponding line current polarity of 8-valid states, two of them (state-7 and state-8) create zero A.C. line voltages. Here case, A.C. line currents free-wheel over and done with either lower or upper components. The enduring states (state-1 to state-6) create non-zero A.C. output voltages. So as to produce an assumed voltage wave-form, inverter moves on or after one state to another state. Thus subsequent A.C. output line voltages contain of discrete (Not continuous) values of voltages that are $[V_i]$, '0', and $[-V_i]$ for topology revealed. The choice of states so as to produce given wave-form is done by modulating method that must confirm use of merely valid states.

3. PWM in Inverters

Output voltage as of an inverter can as well be attuned by working out a control contained by inverter itself. The furthermost effectual technique of doing this is by PWM (Pulse Width Modulation) control used with-in an inverter.

In this method, a fixed dc input voltage is given to the inverter and a controlled ac output voltage is obtained by adjusting the on and off periods of the inverter components. This is furthermost widely held technique of regulatory output voltage and this technique is called as PWM (Pulse Width Modulation) Control.

The benefits possessed by PWM (Pulse Width Modulation) methods are as under:

- ✓ The output voltage control by means of this technique can be achieved deprived of any further components.

- ✓ With technique, lower order harmonics can be eradicated or diminished alongside with its output voltage control. As greater order harmonics can be filtered simply, filtering necessities are diminished.

The foremost shortcoming of this technique is that SCRs are costly as they necessity keep low turn-ON and turn-OFF times.

PWM (Pulse Width Modulation) inverters are fairly widespread in industrialized applications. PWM (Pulse Width Modulation) methods are categorized by constant amplitude pulses. The pulses width is on the other hand modulated to achieve inverter output voltage regulator and to diminish its harmonic gratified.

The dissimilar PWM (Pulse Width Modulation) methods are as under:

i. Single-Pulse Modulation
ii. Multiple-Pulse Modulation
iii. Sinusoidal PWM (Pulse Width Modulation) (Carrier-based PWM Method)

At this time we deliberate about Carrier-based PWM (Pulse Width Modulation) for open-loop control of 3-phase IM (Induction machine) drive.

This is an extension lead of one make well-known to for 1-phase VSIs (Voltage Source Inverters). In this case and so as to produce 120^0 out-of-phase load-voltages, 3-modulating signals that are 120^0 out-of-phase are used. So as to use a single-carrier signal and reserve topographies of PWM (Pulse Width Modulation) method, normalized-carrier frequency m_f must be an odd-multiple of 3. Consequently, all the phase voltages (v_{aN}, v_{bN}, and v_{cN}) are indistinguishable but then 120^0 out of phase deprived of even harmonics; furthermore, harmonics at frequencies a multiple of 3 are indistinguishable in amplitude and phase in all the phases.

4. SVPWM for 3-Phase VSI

The topology of a 3-leg VSI (Voltage Source Inverter) is revealed in Figure 1. Due to constraint that input-lines need not ever be shorted and output-current need each time be continuous a VSI (Voltage Source Inverter) can adopt only 8-distinct topologies.

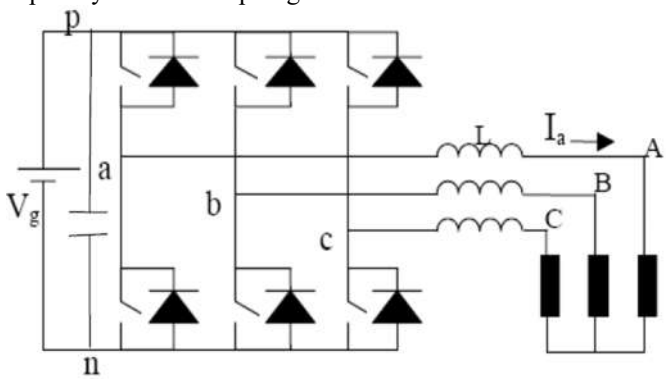

Figure 1: Topology of a 3-Leg Voltage Source Inverter

The anticipated 3-phase voltages at output of inverter might be signified by means of an equivalent vector "V" revolving in counter clock-wise way as revealed in Figure 2(a). The amplitude of this vector is correlated to magnitude of output potential (Figure 2(b)) and time this vector takings to comprehensive one rebellion is similar as major time epoch of output potential.

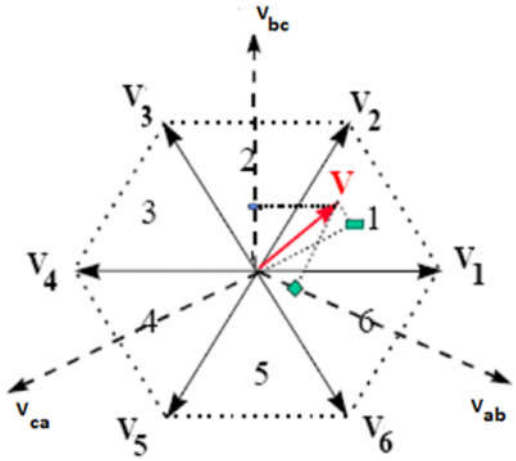

Figure 2 (a): Output Voltage Vector in (α-β) Plane

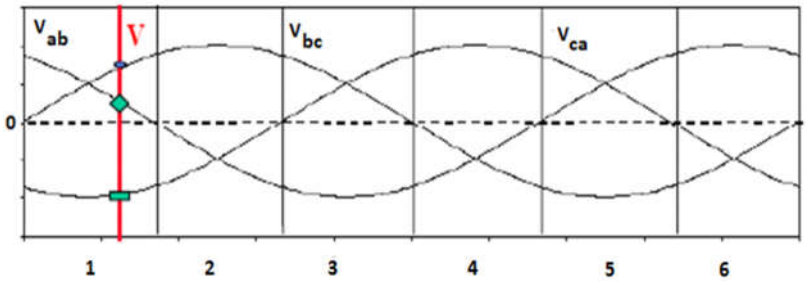

Figure 2 (b): Output Line Voltages in Time Domain

The SVPWM (Space Vector Pulse Width Modulation) can be applied by means of using weaken sector selection algorithm or through using a carrier-based space vector process.

The kinds of SVPWM (Space Vector Pulse Width Modulation) carrying out are:-

i. Sector selection based SVM (Space Vector Modulation)

ii. Diminished switching SVM
iii. Carrier-based SVM
iv. Diminished switching carrier-based SVM

Sector selection based SVPWM: The figure underneath above gives an hint of sector selection based SVM (Space Vector Modulation). We have set in similar using Simulink blocks and S-functions processes wherever desirable.

Diminished Switching SVPWM: The switching of IGBTs can be diminished by 33 percent through selecting to use one of '0'-vectors all through each one sector. The execution is revealed in figure underneath.

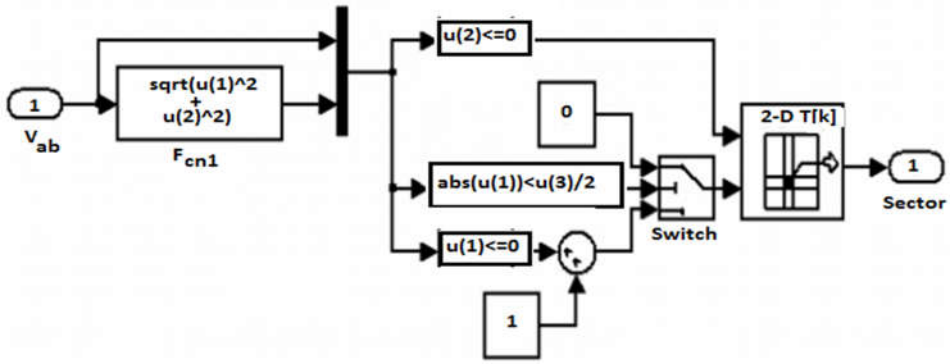

Figure 3: Sector Selection Algorithm

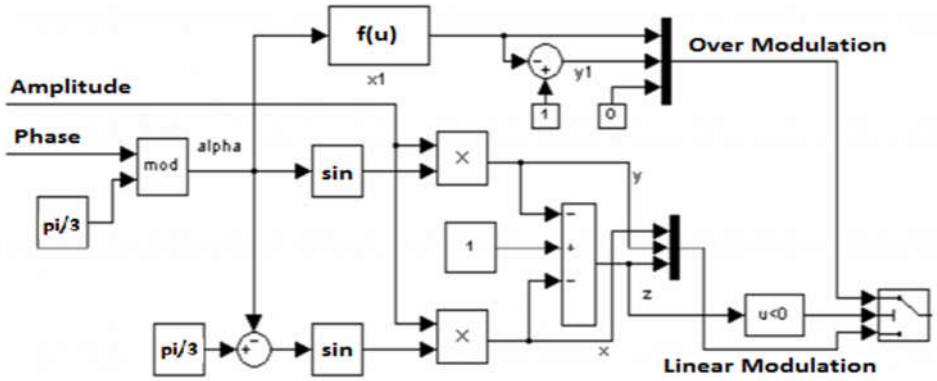

Figure 4: Deriving Weights of Adjacent Non-Zero Basic Vector

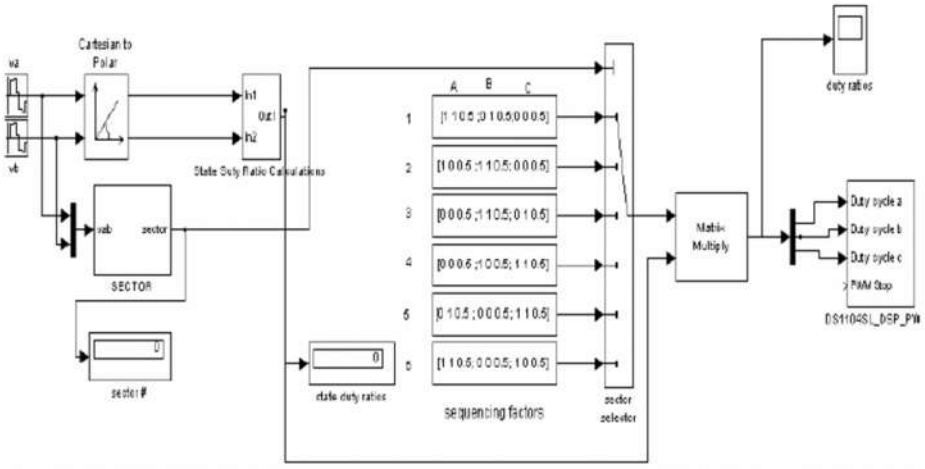

Figure 5: SVM Simulink Model

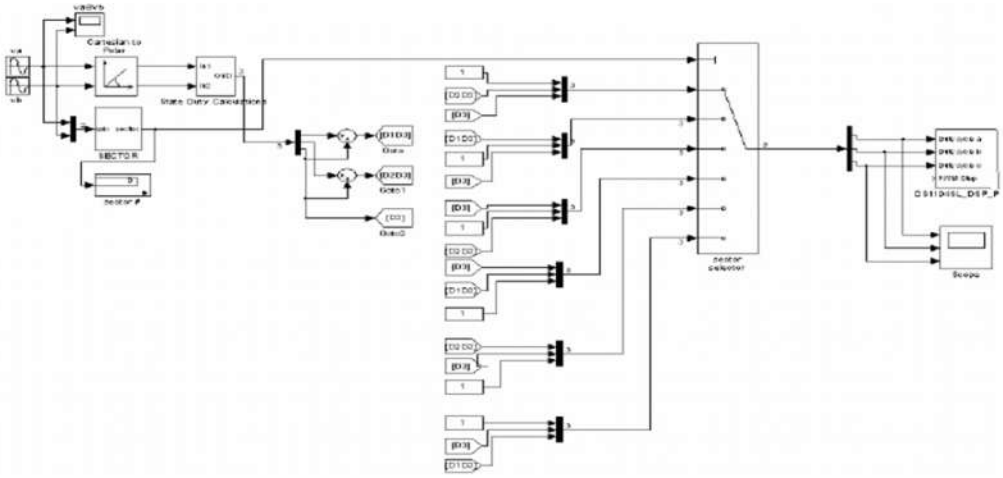

Figure 6: Diminished SSV-PWM

Carrier Based SVPWM: Carrier-based SVPWM (Space Vector Pulse Width Modulation) permit quick and effectual execution of SVPWM (Space Vector Pulse Width Modulation) deprived of sector determination. The method is based on duty-ratio profiles that SVPWM (Space Vector Pulse Width Modulation) shows. By equating duty ratio profile through a greater frequency triangular carrier pulses can be produced, based on similar influences as SPWM (Sinusoidal Pulse Width Modulation).

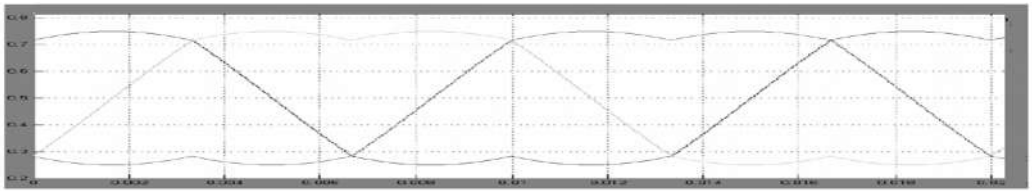

Figure 7: Duty Ratio Profile through Standard SVPWM

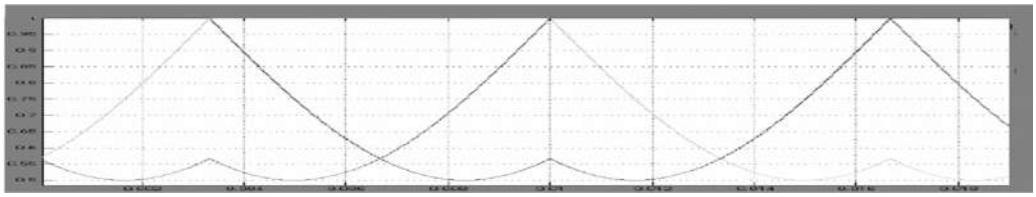

Figure 8: Duty Ratio Profile through Diminished Switching SVPWM

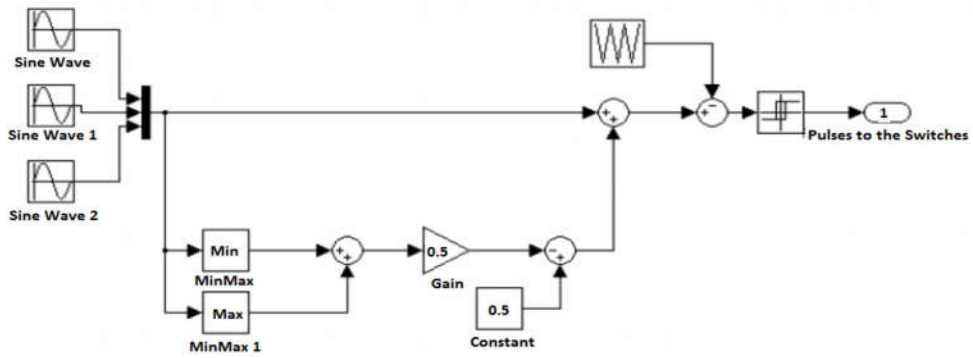

Figure 9: Carrier Based SVM (Space Vector Modulation) Based on Common Mode Voltage Addition

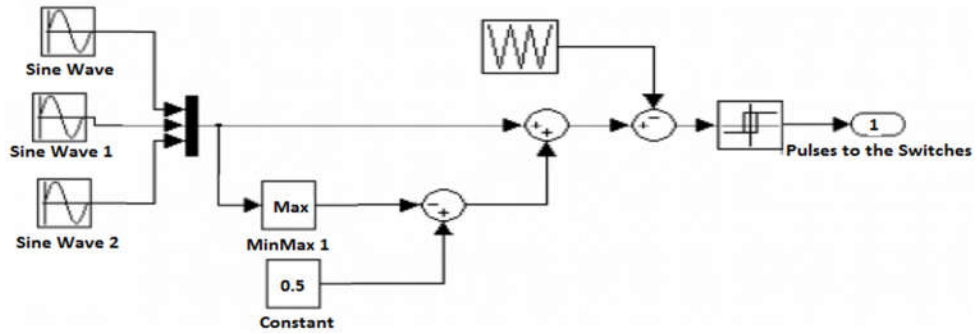

Figure 10: Diminished Switching Carrier Based SVM Based on Common Mode Voltage Addition and Unique Zero Vector Utilization

Sinusoidal PWM and SVPWM Comparison: In Figure 11 below, 'U' does phase-to-center potential comprise triple-order harmonics that are produced by SVPWM (Space Vector Pulse Width Modulation), and 'U1' is sinusoidal allusion potential. But then triple 'n'-order harmonics aren't seemed in phase-to-phase potential too. This leads to greater Modulation Index (m) equated to SPWM (Sinusoidal Pulse Width Modulation).

SPWM (Sinusoidal Pulse Width Modulation) merely reaches to 78 percent of square-wave process, but then amplitude of extreme probable voltage is 90 percent of square-wave in case of SVPWM (Space Vector Pulse Width Modulation). The extreme phase-to-center potential by SPWM (Sinusoidal Pulse Width Modulation) and SVPWM (Space Vector Pulse Width Modulation) are correspondingly;

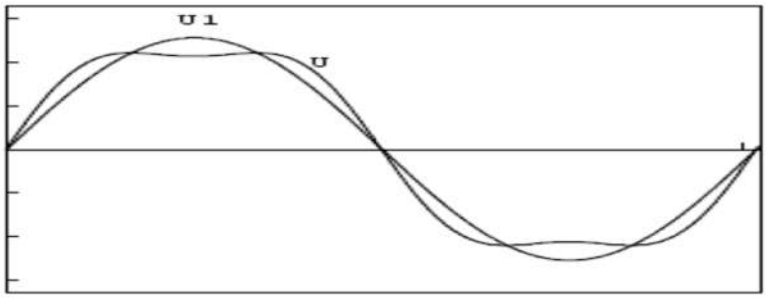

Figure 11: Phase-to-Center Voltage by SVPWM

$\boldsymbol{V_{max} = V_{dc}/2}$
For SPWM (Sinusoidal Pulse Width Modulation); And

$\boldsymbol{V_{max} = V_{dc}/\sqrt{3}}$
Where, V_{dc} is D.C.-Link voltage: for SVPWM (Space Vector Pulse Width Modulation)

This means that SVPWM (Space Vector Pulse Width Modulation) can create about 15 percent greater than SPWM (Sinusoidal Pulse Width Modulation) in output potential.

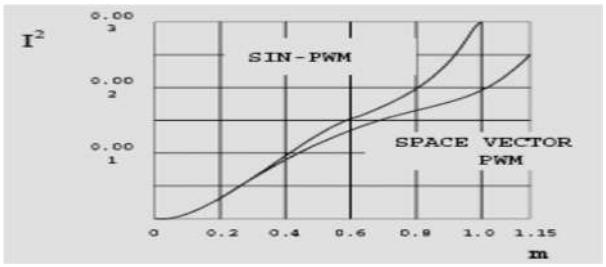

Figure 12: Root Mean Square Harmonic Current

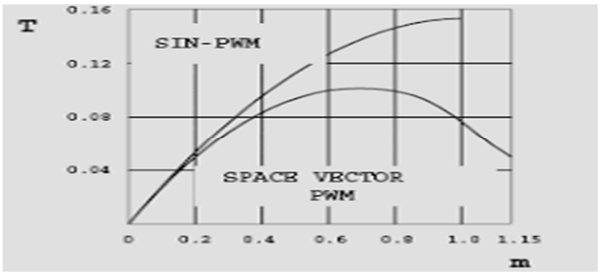

Figure 13: Torque Harmonics

MATLAB/Simulation consequences in Fig. 12 and 13 displays that greater Modulation Index (m) is fewer harmonics of current and torque by SVPWM (Space Vector Pulse Width Modulation) are than those of SPWM (Space Pulse Width Modulation).

On the other hand, SVPWM (Space Vector Pulse Width Modulation) algorithm used in 3-level inverters is further composite due to large quantity of inverter switching states.

Conclusion

The research papers reveals the basic fundamental and research study of SVPWM (Space Vector Pulse Width Modulation), PWM (Pulse Width Modulation), Voltage Source Inverters (VSI), PWM in Inverter, SVPWM for 3-Phase VSI.

References

[1] Ronanki Deepak, Abdul Azeez Najath, Patnaik Lalit, S. Williamson & Sheldon “Hybrid multi-carrier PWM technique with computationally efficient voltage balancing algorithm for modular multilevel converter”. 224-229,2018.

[2] S. P. Jena and K. C. Rout, "Comparative Analysis of Harmonic Reduction of VSI Fed Induction Motor Using SVPWM and Sinusoidal PWM," 2018 2nd International Conference on Trends in Electronics and Informatics (ICOEI), Tirunelveli, India, 2018, pp. 1-5.

[3] W. Makhubele, Josias & A. Ogudo, Kingsley. “Analysis on Modulation Techniques of an AC drive with Respect to Harmonic Content and Efficiency. pp1-8, 2018.

[4] Z. Li, Y. Guo, Z. Song, H. Li and X. Zhang, "Modified Synchronized SVPWM Strategies to Reduce Common-Mode Voltage for Three-Phase Voltage Source Inverters at Low Switching Frequency," 2018 21st International Conference on Electrical Machines and Systems (ICEMS), Jeju, 2018, pp. 1330-1334.

[5] Marian Gaiceanu, Silviu Epure, Cristinel Radu Dache, Razvan Buhosu, Iulian Ghenea, Cristian Vidan, "Laboratory power inverter platform for variable speed drive", Electrical and Electronics Engineering (ISEEE) 2017 5th International Symposium on, pp. 1-6, 2017.

[6] Aboadla, Ezzidin & Tohtayong, Majdee & A. Bin Aznan, Khairil & Khalil, Ashraf & Khan, Sheroz & Habaebi, Mohamed & Gunawan, Teddy & Hamida, Belal & Yaacob, Mashkuri. “A comparative study between SPWM and SHE-PWM modulation techniques for DC-AC inverters”.pp 1-5, 2017.

[7] Junjie, li & Jiang, Jianguo. "Active Voltage-balancing Control Methods for the Floating Capacitors and DC-link Capacitors of Five-level Active Neutral-Point-Clamped Converter. Journal of Power Electronics. 17. 653-663. 2017.

[8] Aboadla, Ezzidin & Khan, Sheroz & Habaebi, Mohamed & Gunawan, Teddy & Hamida, Belal & Yaacob, Mashkuri. “Effect of modulation index of pulse width modulation inverter on total harmonic distortion for sinusoidal. pp 192-196, 2016.

[9] Reddy, B & Reddy Kondreddy, Sreekanth & Siva Reddy Beduduri, Samba. "Novel single phase full bridge inverter formed by floating capacitors. International Journal of Power Electronics and Drive Systems (IJPEDS). 7. 193. 10.11591/ijpeds.v7.i1.pp193-201. 2016.

[10] Analysis, Design and Control of Sinusoidal PWM Three Phase Voltage Source Inverter Feeding Balanced Loads at Different Carrier Frequencies Using MATLAB International Journal of Advanced Research in Electrical, Electronics and Instrumentation Engineering (An ISO 3297: 2007 Certified Organization) Vol. 3, Issue 5, May 2014.

[11] Simulation and Analysis of PWM Inverter Fed Induction Motor Drive. International Journal of Science, Engineering and Technology Research (IJSETR). Volume 2, Issue 2, February 2013.

[12] Kim, M.-Y.; Song, Y.-U.; Kim, K.-H. The advanced voltage regulation method for ULTC in distribution systems with DG. J. Electr. Eng. Technol. 2013, 8, 737–743.

[13] Mokhtarpour, A.; Shayanfar, H.; Bathaee, S.M.T.; Banaei, M.R. Control of a single phase unified power quality conditioner-distributed generation-based input output feedback linearization. J. Electr. Eng. Technol. 2013, 8, 1352–1364.

[14] "Modeling and Simulation of Modified Sine PWM VSI Fed Induction Motor Drive." International journal of Electrical Engineering & Technology , Volume 3, Issue 2, July – September 2012.

[15] Pankaj H Zope, Pravin G.Bhangale, Prashant Sonare, S. R.Suralkar "Design and Implementation of carrier based Sinusoidal PWM Inverter." International journal of Advanced Research in Electrical, Electronics and Instrumentation Engineering. Vol. 1, Issue 4, October 2012.

[16] Vijaya Bhaskar Reddy. K and G.V. Siva Krishna Rao "Comparison of sine PWM and SVM controlled induction motor drives," CIIT International journal of Artificial Intelligent systems and Machine Learning, Vol 3, No 13, December 2011.