A REVIEW ON IMPEDANCE FED VECTOR CONTROL OF AC-MOTOR DRIVE

Gyan Kishor[1], Deepmala[2], Dr. E Vijay Kumar[3]
[1]M.Tech Scholar, [2]Assistant Professor, [3]Associate Professor
Department of Electrical Engineering
SRK University, Bhopal, Madhya Pradesh, India
[1]gyankishor24061992@gmail.com, [2]deepmala.eee@gmail.com

Abstract: *This research paper reveals the study of Z-source converter overwhelms the intangible and conjectural barriers and restrictions of traditional VSC (Voltage Source Converter) and CSC (Current Source Converter) and gives a progressive power conversion idea. The Z-source inverter scheme can produce an output voltage better than D.C. input voltage by regulatory shoot-through duty ratio, which is unbearable for traditional ASD schemes. In this research work, designated the working principle, examined the circuit physiognomies, and confirmed its idea and superiority. Several PWM (Pulse Width Modulation) methods and their comparison are presented here. Maximum constant boost control technique is more beneficial PWM (Pulse Width Modulation) control scheme amid other PWM (Pulse Width Modulation) control approaches. Maximum constant boost by means of third harmonic injection PWM (Pulse Width Modulation) control approach escalations output voltage boost although diminishing voltage stresses athwart switching devices.*

Keywords: *CSI (Current Source Inverter), VSI (Voltage Source Inverter), Z-source converter, PWM (Pulse Width Modulation).*

1. Introduction

In certain application, for instance battery powered, PV (Photovoltaic) or fuel cell schemes, load necessitates higher D.C. voltage than D.C. source voltage. In this condition, usage of D.C/D.C converter develops obligatory in terms of efficacy reasons. Conventionally, a boost converter can be used to escalation input voltage to an upper voltage level.

The additional topologies, used to boost input voltage, for instance fly-back and current-fed converters are imitative from boost converter. Moreover, in various applications of the D.C/D.C converters electrical isolation amid the input and output grounds are the foremost prerequisite to prevent D.C current flows amid input ground and output ground. D.C current which flows amid input and output grounds can diminution overall scheme consistency and reason fiascoes at load side. If electrical isolation amid input and output stages is a concern than usage of Conventional boost converter is inopportune and transformer based D.C/D.C converters requisite be used.

The foremost transformer-based boost-converter is fly-back converter since it is a buck-boost imitative converter. The fly-back converter is commonly used up to 100 Watts-150 Watts. Though, if load power and current demand rises it has some shortcomings [1]. The voltage stress on switch is high since of topology. If output power rises too which reasons a

significantly energy stowed on leakage inductance of transformer rises and causes large voltage spike on switch. This phenomenon restrictions fly-back converter output power rating. The full-bridge structure is favored if load power demand escalations beyond 250 Watts - 300 Watts for isolated D.C/D.C converters.

The traditional full-bridge topology diminishing input voltage to a lesser level is generally a buck imitative topology since energy careworn from source is conveyed to load suddenly. Though, voltage-fed full-bridge converter by means of step-up transformer and current-fed full-bridge converter can be used for boost applications.

Voltage-fed full-bridge converter for a step-up transformer application has been investigated before together by means of effects of turn-ratio and leakage inductance of transformer and output inductor, [2]. This research illustration that root mean square current which flows over MOSFETs raises just in case transformer turn-ratio rises. This hints to advanced power loss on MOSFETs (Metal Oxide Semiconductor Field Effect Transistors) and lessening of converter efficacy. Additional research described in literature on a ZVS (Zero Voltage Switching) application of voltage-fed full-bridge D.C/D.C converter diminishes switching fatalities on MOSFETs (Metal Oxide Semiconductor Field Effect Transistors) and conduction fatalities on transformer, [3]. In traditional ZVS (Zero Voltage Switching) application of voltage-fed full-bridge D.C/D.C converter, ideal current flow over primary side of transformer and over MOSFETs (Metal Oxide Semiconductor Field Effect Transistors) all through freewheeling interval is high. Additional ZVS (Zero Voltage Switching) voltage-fed converter is suggested in [4]. This anticipated arrangement diminishes the ideal current to lesser levels. Thus, conduction fatalities of MOSFETs (Metal Oxide Semiconductor Field Effect Transistors) and transformer are diminished.

There are numerous studies in literature concerning to current-fed full-bridge topologies. [5] Examines and deliberate working issues of them. [6] Suggests a ZVS (Zero Voltage Switching) application of them to diminish voltage stress on switching MOSFETs (Metal Oxide Semiconductor Field Effect Transistors) and rectifier diodes. A constant turn-on control, foremost to mutable switching frequency, to attain ZCS (Zero Current Switching) is applied to such topology in [7]. This arrangement diminishes current and voltage stresses and switching fatalities on devices. Additional profit of the ZCS (Zero Current Switching) application is eradication of reverse retrieval glitches at rectifier diodes.

Step-up applications of voltage-fed full-bridge converter show low voltage spike on switches at primary side equated to current-fed full-bridge converter. Thus, lesser voltage rated and lesser on state resistance MOSFETs (Metal Oxide Semiconductor Field Effect Transistors) can be used in voltage-fed converter. As well, current-fed converter has start-up difficult to contrary of voltage-fed converter, [6]. Though, transformer of voltage-fed step-up full-bridge has high leakage inductance and dependent capacitance due to the huge turn-ratio. High leakage inductance and dependent capacitance raise switching loss, composed by means of voltage and current spikes on constituents, [7]. As well, high currents over switches on primary side and voltage ringing on rectifier-diodes are additional drawbacks of voltage-fed full-bridge converter equated to current-fed one, [5]. In [8], current-fed and voltage-fed full-bridge converters are equated in relations of semiconductor fatalities, intricacy of converter and effects of leakage inductance and dimensions of transformer. It is obvious that current-fed converter is more appropriate for HV (High Voltage) applications than voltage-fed converter due to semiconductor fatalities, transformer dimensions and voltage stress on rectifier-diodes. Additional criterion to current-fed converter optimal is smoothness of current drawn from source. The traditional current-fed full bridge converter is revealed in Figure 1.

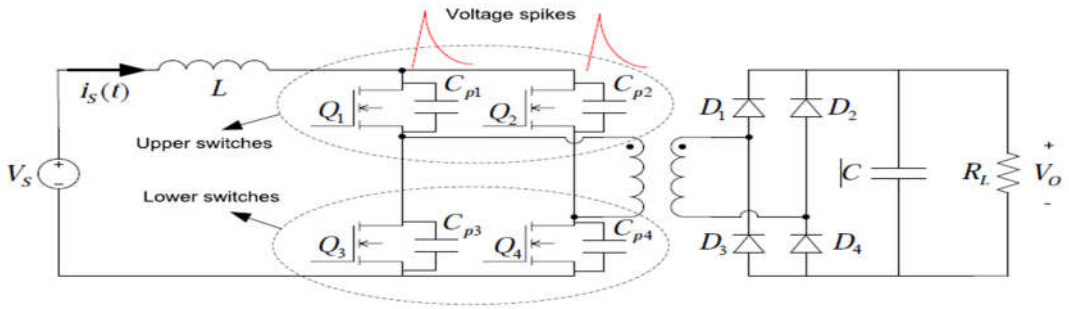

Figure 1. Traditional Current-Fed Full Bridge D.C/D.C Converter

In steady-state process of current-fed full-bridge converter, when duty-factor is high all switches, Q_1, Q_2, Q_3 and Q_4, are 'ON' and input is shorted to ground across inductor (L). In this time interval, inductor (L), energized, when duty-factor is small, one of diagonal switch pairs "(Q_4 and Q_1) or (Q_3 and Q_2)" are in conduction. The conduction of one pair follows other. For 1st epoch, if switch pair, "(Q_4 and Q_1), is in conduction then and there, for 2nd period, switch pair, (Q_3 and Q_2), will be conducting. Thus, energy stowed in inductor is conveyed to load when duty-factor is small.

From Fig.1, one of higher switches (Q_2 and Q_1) and one of lesser switches (Q_4 and Q_3) must be 'ON' for whole period of functioning. If this situation is not fulfilled because of failure of gating of switches (which can be ascends from EMI glitches, failure of MOSFET (Metal Oxide Semiconductor Field Effect Transistor) driver circuit, controller failure or etc.), all stowed energy in inductor is shifted to dependent capacitances (C_{P1}, C_{P2}, C_{P3} and C_{P4},) of switches. The conveyed energy causes enormous voltage spike, shown in Fig.1, since dependent capacitances of switches are confined equated to quantity of conveyed energy to them. The switches are spoiled since voltage spike surpasses break down voltage. This fact diminutions reliability of converter.

The dependability problem can be resolved in current-fed full-bridge converter by means of "Z"-source structure in its place of a single inductor (L).
The suggested arrangement is shown in Figure 2.

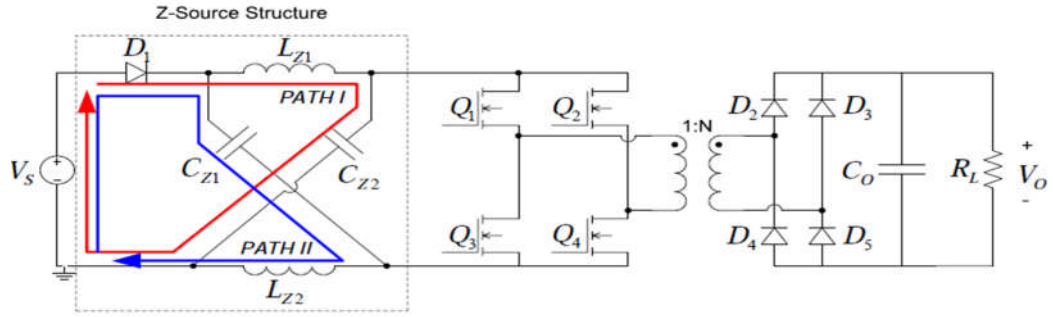

Figure 2 Demonstration of Usage of "Z"-Source Structure Instead of Single Inductor (L) in Current-Fed Full Bridge Converter

The functioning principle of "Z"-source full-bridge D.C/D.C converter is akin to current-fed full-bridge converter. When duty-factor is great, all switches (Q_1, Q_2, Q_3 and Q_4) are 'ON' and "Z"-source inductors (L_{Z1} and L_{Z2}), are energized. When duty-factor is small, sequential

driving of diagonal switch pairs "(Q_4 and Q_1) or (Q_3 and Q_2)" transfer the stowed energy in L_{Z1} and L_{Z2} to load (R_L).

In "Z"-source full-bridge converter, if one of upper switches (Q_2 and Q_2) and one of lower switches (Q_3 and Q_4) are not gated concurrently, the stowed energy in "Z"-source inductor (L_{Z1}) is conveyed to Z-capacitor (C_{Z2}), over PATH-I, as revealed in Figure 2. Correspondingly, stowed energy in "Z"-source inductor (L_{Z2}) is conveyed to "Z"-capacitor, (C_{Z1}), over PATH-II. Thus, there will be no-voltage spike across switch terminals and switches will not be smashed. "Z"-source full-bridge D.C/D.C converter can be used in its place of current-fed full-bridge D.C/D.C converter to raise dependability of converter colossally.

"Z"-source structure can be used in all kinds of power conversions for example A.C/A.C converters, A.C/D.C rectifiers, D.C/A.C inverters and D.C/D.C converters. The foremost process ideologies of "Z"-source structure and application of "Z"-source structure to inverter are examined in detail in [9]. The research deliberates the shortcomings of traditional current-fed and voltage-fed inverters also. In voltage-fed inverter, output A.C. voltage can't overdo the input D.C. voltage and lower and upper switches of similar phase can't be made 'ON' at similar time all through operation.

In addition, in current-fed inverter, output A.C. voltage is at all times superior than input D.C. voltage, and one of lower switches and one of upper switches need be 'ON' at any time all through the operation. "Z"-source inverter eradicates these difficulties and provides a prospect of by means of inverter as a step-down or step-up inverter.

The 1-phase A.C/A.C converter application of "Z"-source structure is examined in [10]. The utmost widespread topology for A.C/A.C converter for prerequisite of dissimilar output voltage level and adjustable output frequency is usage of cascaded diode-rectifier and inverter, correspondingly. Conversely, if merely voltage regulation at output side is of anxiety, 1-phase "Z"-source A.C/A.C converter can give an inexpensive and smaller-sized solution, [10]. Also, anticipated 1-phase "Z"-source A.C/A.C converter in [10] can be used to tackle voltage-sags, surges and load variations or fluctuations. Furthermore, the working principle of 3-phase "Z"-source A.C/A.C converter is examined in [11].

The application of "Z"-source structure in 1-phase rectifier is anticipated in [12]. Also, working principle of anticipated circuit is examined in that research. By means of 1-phase "Z"-source rectifier in its place of traditional 2-stage A.C/D.C buck rectifier carries some benefits. It provides the prospect to modify the output D.C. voltage superior or lesser than input A.C. voltage. Also, diminished and 1-stage structure of suggested rectifier gives high efficacy and lesser size, [12]. In addition, 3-phase rectifier application of "Z"-source structure is anticipated in [13]. In that research work, power-factor of rectifier is deliberated together through working principle.

For D.C/D.C application of "Z"-source structure, key researches are [14] and [15]. In both, evaluated circuit is a basic version of "Z"-source full-bridge D.C/D.C converter, as revealed in Figure 3.

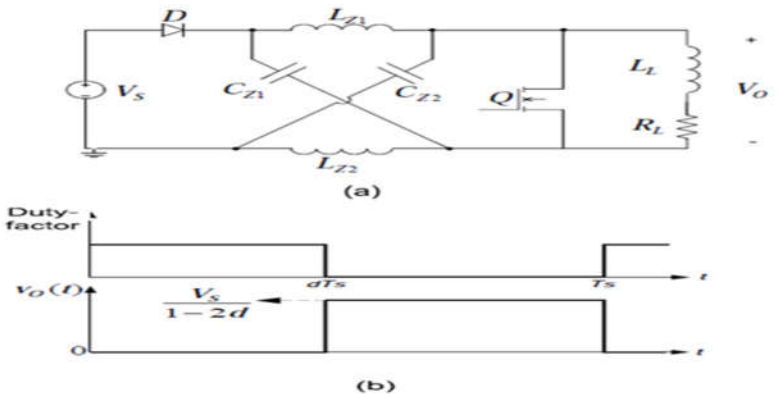

Figure 3 (a) Examined "Z"-Source DC/DC Converter, (b) Output Voltage Wave-form

[14] Examines key working principle of suggested "Z"-source D.C/D.C converter, revealed in Figure 3. The lesser signal correspondent circuits of converter and transfer functions of input voltage to "Z"-source capacitor voltage, duty-factor to "Z"-Source capacitor voltage, input voltage to "Z"-source inductor current, duty factor to "Z"-source inductor current are all defined for CCM (Continuous Conduction Mode) operation. Mentioning to Figure 3, in time-domain, output voltage of converter, v_0 (t) *is* not a decently D.C. voltage, on contrary, it is a rectangular-wave voltage swinging amid zero and its maximum value, [V_S/(1-2d)], at switching frequency. The averaged output-voltage of converter, V_0, is equivalent to voltage across "Z"-source capacitor. Therefore, for compensation and determination of output voltage, voltage across "Z"-source capacitor is used in investigation in [14]. In [15], voltage-mode and current programmed mode control methods are applied to "Z"-source D.C/D.C converter rendering to transfer functions originated in [14].

In Figure 3, load is signified as a R_L - L_L. This demonstration is appropriate for inductive loads (I_L) for instance D.C. motors since mechanical time constant of a D.C. motor is ample greater than rectangular-wave output voltage period and output voltage swings don't prevent process of D.C. motor. Conversely, suggested circuit is problematic for resistive (R_L) or capacitive (C_L) kind loads. Consequently, an output filter need be added at output of "Z"-source D.C/D.C converter to acquire a pure D.C. voltage at output, [13]. An L-C filter can be a decent choice for filtering output voltage. 2nd-order L-C filter consequences in fewer voltage ripples at output and few current stresses on capacitor equated to those of 1st-order C-filter. The suggested 'Z'-source D.C/D.C converter to acquire pure D.C. voltage at output side is revealed in Figure 4.

The variances amid circuits revealed in Figure 3 and Figure 4 are accumulation of diode D_2 in series with inductor (L_0), and output capacitor (C_0) normally, diode D_2 signifies rectifier diodes of full-bridge D.C/D.C converter and output capacitor (C_0), is added to attain 2nd-order filtering at output.

The accumulation of *C0* changes all dynamic responses of converter. The transfer functions assumed in [14] are not lawful for circuit shown in Figure 4 any longer. Consequently, transfer functions of converter need be defined to design a controller.

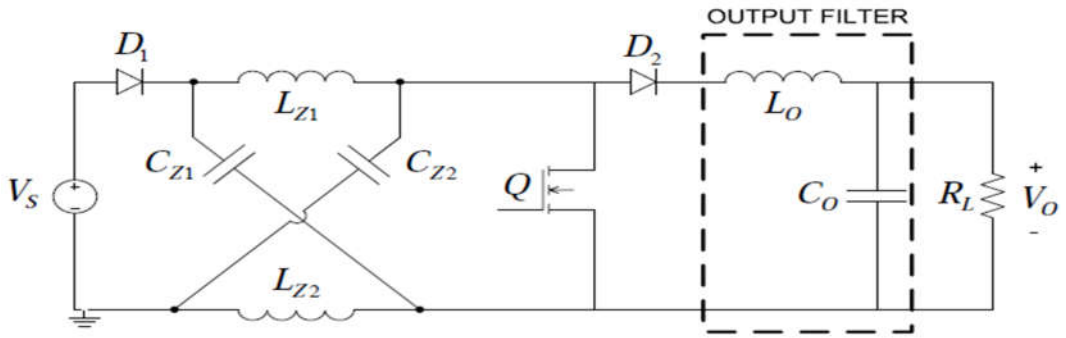

Figure 4. The "Z"-Source DC/DC Converter with L-C Filter at Output Side

Corresponding to every single switch mode regulators, "Z"-source D.C/D.C converter can work in two functioning modes: CCM (Continuous Current Mode) and DCM (Discontinuous Current Mode). Mentioning to Figure 4, anticipated "Z"-source D.C/D.C converter has 2-diodes (D_1 and D_2). So, converter has one CCM (Continuous Current Mode) and 3-different DCM (Discontinuous Current Mode) of processes for instance:

- CCM (Continuous Current Mode): In this mode, currents over and done with input diode (D_1) and diode (D_2) never fall to zero formerly next epoch starts.

- DCM (Discontinuous Current Mode) 1st Operation: In this mode, current over and done with input diode (D_1) falls to zero formerly next epoch commencement, but current over and done with diode (D_2) never falls to zero for whole period.

- DCM (Discontinuous Current Mode) 2nd Operation: In this mode, current through diode (D_2) falls to zero formerly commencement of next epoch, but then current over and done with input diode (D_1) doesn't fall to zero.

- DCM (Discontinuous Current Mode) 3rd Operation: In this mode, both currents over and done with input diode (D_1) and diode (D_2) fall to zero formerly commencement of next epoch.

2. Z-Source Converter

In The ZSC ("Z"-source converter) is a novel topology in power transformation, which has exclusive topographies that can overwhelm limitations of VSI (Voltage Source Inverter) and CSI (Current Source Inverter) [5]. Figure 5 illustrations ZSC ("Z"-source converter) realized as a 3-phase D.C/A.C converter (inverter). Even though D.C/A.C transformation is utmost common application of "Z"-source topology, it can similarly be applied to A.C/D.C and A.C/A.C power transformations [24-25]. The "X" shape impedance is "Z"-source network which is composed of 2-split inductors and 2-capacitors to give a coupling amid D.C. source and inverter-bridge.

The ZSI ("Z"-source inverter) has exclusive buck-boost ability which preferably provides an output-voltage range from zero (0) to infinity (∞) irrespective of input voltage. This is attained by means of a switching-state that is not allowable in VSI (Voltage Source Inverter) which is so-called "shoot-through" state. This is state when both lower switches and upper switches of a phase-leg are turned on. In a conventional VSI (Voltage Source Inverter) switching pattern, there are 8-permissible switching conditions. 6 of those switching situations are so-called "active" situations where load gets input voltage and enduring 2-states

are so-called "zero" states where either one all lower or all upper switches are on or load gets zero voltage.

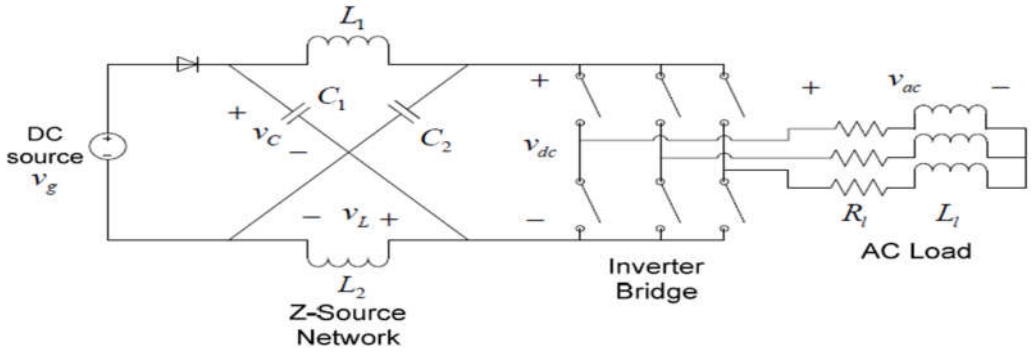

Figure 5. ZSC Implemented as a 3-Phase Inverter (ZSI)

Figure 6(a) illustrations carrier based PWM (Pulse Width Modulation) switching pattern for a VSI (Voltage Source Inverter). As stated by this switching technique, reference-signals for 3-phase voltages are equated to a triangular-carrier signal. If a reference-signal is better than carrier-signal, upper-switch in leg of equivalent phase turn into "ON" and lower-switch of similar phase leg becomes "OFF" and vice versa. All of 8-allowable switching situations of a VSI (Voltage Source Inverter) can be illustrious from Figure 6(a) as well as 2-zero states. 1st zero state happens when carrier-wave is better than all of reference-signals, viz. all upper-leg switches are "ON" and lower-leg switches are "OFF". The 2nd zero state happens when carrier-wave is lesser than all of reference-signals.

The "shoot-through" state can be disseminated amongst carrier based switching pattern of VSI (Voltage Source Inverter) in Figure 6(a) deprived of misrepresenting carrier based PWM (Pulse Width Modulation) signal generation. Figure 6(b) demonstrates addition of "shoot-through" state as similarly disseminated quantities of time inside zero (0) states. It can be gotten from Figure 6(b) that "active"- states for both carriers based PWMs (Pulse Width Modulations) are alike for VSI (Voltage Source Inverter) and ZSI (Z-Source Inverter). This assurance that Modulation Index (M) which is distinct as ratio of entire "active" states to entire epoch is similar for both switching patterns.

An additional benefit of ZSI (Z-Source Inverter) equated to VSI (Voltage Source Inverter) seems in practical enactment of carrier based PWM (Pulse Width Modulation) switching pattern. For safety purposes it is essential to set "dead-times" through transitions from one-switching state to another. This reasons output wave-form distortion. Because of exclusive impedance network that ZSI (Z-Source Inverter) uses, "dead-times" are not essential.

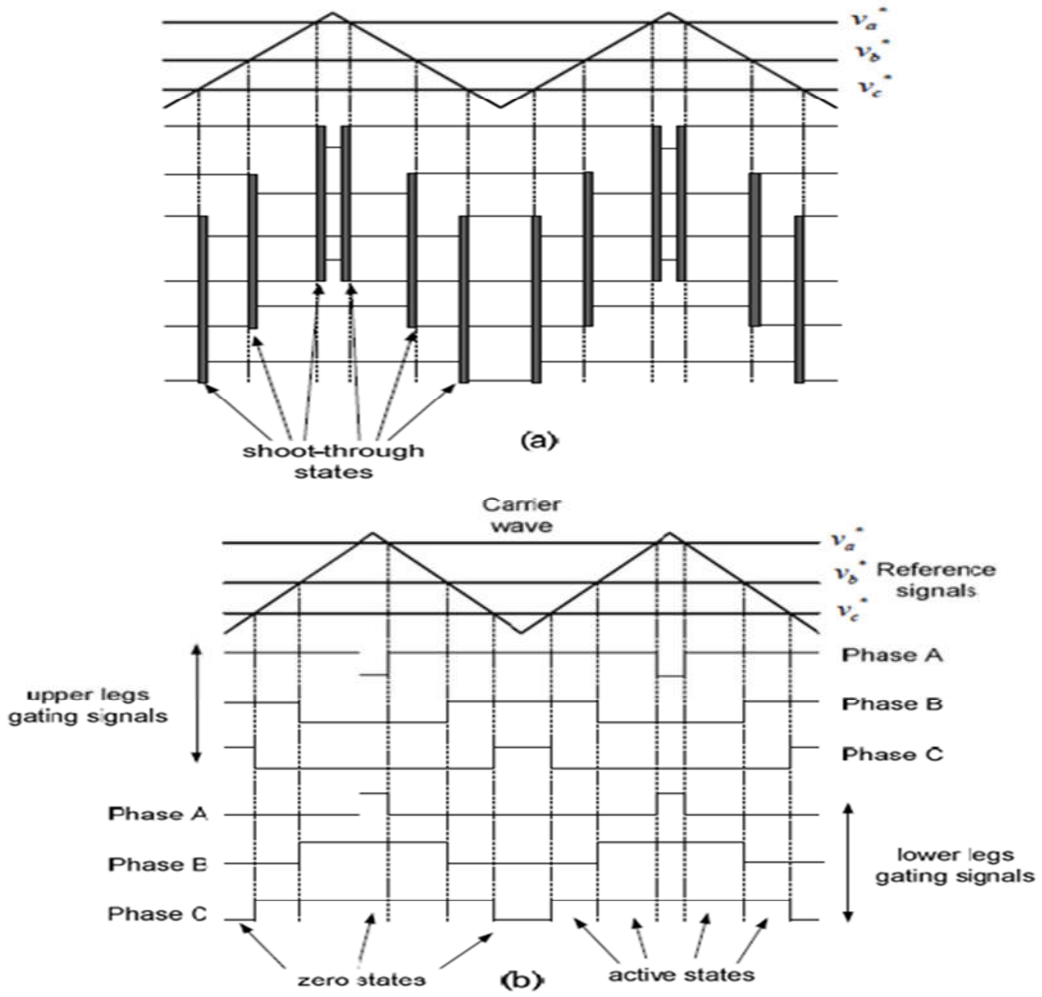

Figure 6 (a) Modified Carrier Based PWM for ZSI (b) Carrier Based PWM for VSI

So as to do steady state analysis and find conversion ratio of ZSC ("Z"-source converter), we will diminish circuit in Figure 5 - Figure 7. The notion behind this is that when we look as of "Z"-source network viewpoint, in "shoot-through" state of Figure 6, "Z"-source network is shorted and in "active"-state, "Z"-source network gets load. This manner can be easy using circuit specified in Figure 3.3. Here circuit, when parallel switch (S_2) is "ON", "Z"-source impedance-network is shorted and load gets zero (0) voltage. In the same way, when switch (S_2) is "OFF", "Z"-source network gets load and "active"-state ensues as in Figure 6(a). It can be detected that D.C.-link voltage (v_{dc}) in Figure 5 has a pulsating nature. For oversimplification purposes, "Z"-source network constraints are carefully chosen as; $\{L_1 = L_2\}$ and $\{C_1=C_2\}$ which makes "Z"-source network proportioned [8]. Consequently, capacitor and inductor voltages of "Z"-source network turn into,

$$v_{C1} = v_{C2} = v_C \text{ and } v_{L1} = v_{L2} = v_L \qquad 1$$

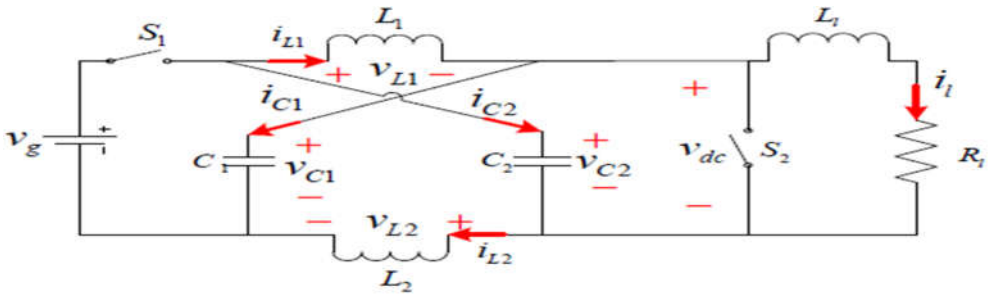

Figure 7 Simplified ZSC

In Figure 7, capacitor voltage is v_C and inductor voltage is v_L. Specified that converter is in "shoot-through" state for an interval of (T_0) all through a switching cycle (T), as of equivalent circuit in Figure 6 we have,

$\{v_L = v_C\}$ and $\{v_{dc}=0\}$

2

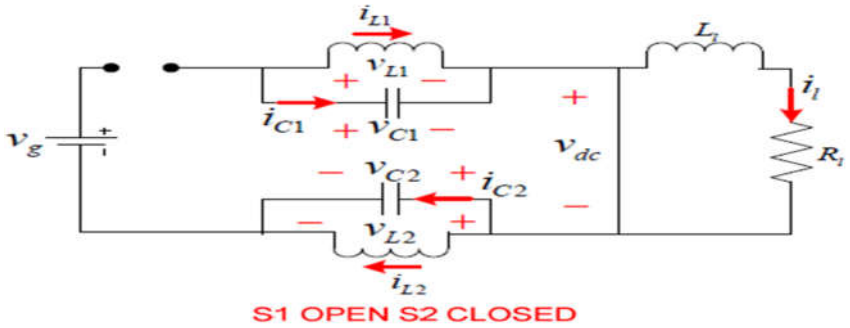

Figure 8. "Shoot-Through" State of Simplified ZSC

In the same way, if converter is in "active"- state for an interval of (T_1) all through switching cycle (T), as of equivalent circuit in Figure 9 we have,

$$v_L = v_g - v_c \qquad 3$$
$$v_{dc} = v_c - v_L = 2v_c - v_g$$

Where, v_g is D.C. source voltage and $\{T=T_0 + T_1\}$

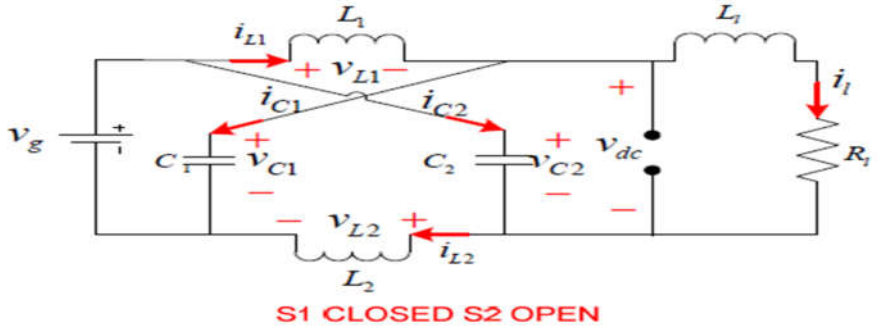

Figure 9. "Active"-State of Simplified ZSC

The average value of voltage through an inductor for a switching period (T) is zero in steady-state, so as of (eq. 2) and (eq. 3) we have,

$$\frac{1}{T}\int_0^T v_L(t)dt = \frac{T_0 V_C + T_1(V_g - V_C)}{T} = 0 \quad (4)$$

Or

$$\frac{V_C}{V_g} = \frac{T_1}{T_1 - T_0} = \frac{1-D}{1-2D} \quad (5)$$

Where, $\{D = T_0 / T\}$ is "shoot-through" duty cycle, (V_C) is steady state (D.C.) value of capacitor voltage and (V_g) is steady-state value of input voltage. The maximum value (v_{dcn}) of pulsating D.C.-link voltage (v_{dc}) is stated in (eq. 3) and it can be amended in steady-state as,

$$V_{dcn} = 2V_g - V_g = \frac{T}{T_1 - T_0} V_g = \frac{1}{1-2D} V_g = BV_g \quad (6)$$

Where, "*B"* is well-known as boosting factor based on (*D),* and $\{V_{dcn}\}$ is steady-state value of maximum D.C.-link voltage (eq. 6) provides voltage conversion ratio of ZSC ("Z"-source converter). Since "*D"* is amid "0" and "0.5", "*B"* can take any value amid "1" and "∞". The output peak-phase voltage (V_{ac}) of ZSI ("Z"-source inverter) in Figure 5 can be stated as,

$$V_{ac} = M\frac{V_{dcn}}{2} \quad (7)$$

Where, "*M"* is modulation Index of inverter. Using (eq. 6), (eq. 7) can be amended as,

$$V_{ac} = MB\frac{V_g}{2} \quad (8)$$

(eq. 8) has an extra multiplication factor of "*B"* compared to VSI (Voltage Source Inverter) voltage conversion ratio which gives the boosting capability to the ZSI ("Z"-Source Inverter) [5].

It was explained in Figure 6 that "shoot-through" states of ZSC ("Z"-Source Converter) can be distributed in the middle of PWM (Pulse Width Modulation) switching pattern of a VSI (Voltage Source Inverter) [5]. It was too stated that in order not to distort output wave-form, it is essential to retain "active"-states similar as in VSI (Voltage Source Inverter) PWM (Pulse Width Modulation) switching pattern. Probable switching state sequences and relevant carrier based executions of PWM (Pulse Width Modulation) switching of ZSI ("Z"-Source Inverters) by different number of output phases are elucidated in [23]. This sector will review how to present "shoot-through" states suitably to modulation of an H-bridge (1-phase) ZSI ("Z"-Source Inverter) based on descriptions in [21].

Consider H-bridge ZSI ("Z"-Source Inverter) in Figure 7 whose switching states is specified in Table 1. The active-state and null-state, in which 2-switches of a phase-lag are switched corresponding, are communal to together conventional VSI (Voltage Source Inverter) and H-bridge ZSI ("Z"-Source Inverter). Though, enduring three "shoot-through" states in which 1-phase leg (H-1 and H-2) or 2-phase-legs (H-3) are short-circuited are exclusive to H-bridge ZSI ("Z"-Source Inverter) [25].

Based on investigation in earlier section and Table 1, it can be observed that when in a "shoot-through" state, "Z"-source inductor currents are boosted but then inverter output voltage is set aside at V_0, akin to that of a "null"-state where A.C. load is short-circuited. Consequently, for a fixed frequency, implanting of "shoot-through" states within null intervals by means of "active"-state intervals sustained constant will not adjust standardized

volt–sec average/switching cycle. This feature permits all prevailing volt–sec PWM (Pulse Width Modulation) approaches to be used for regulatory a ZSI ("Z"-Source Inverter) by only minor amendments added to inset "shoot-through"-states [25].

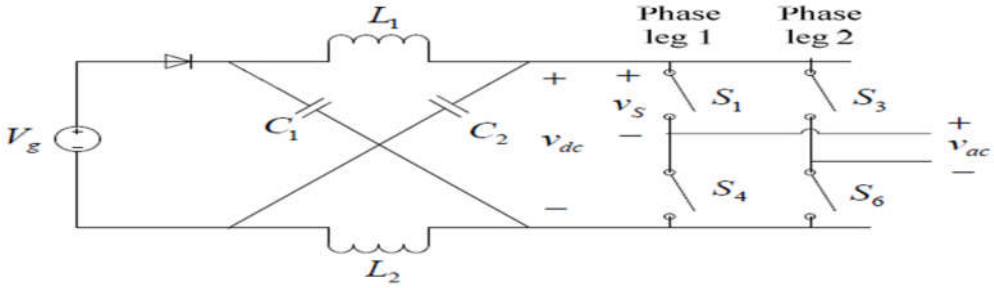

Figure 10 H-Bridge (1-Phase) Z-Source Inverter

Figure 11 displays a probable PWM (Pulse Width Modulation) switching configuration of a conventional 1-phase VSI (Voltage Source Inverter) and a 1-phase ZSI ("Z"-Source Inverter). For conventional VSI (Voltage Source Inverter) modulation, 2-state transitions occur for each switching cycle (e.g., null {00} →active {10} →null {11}) with "active"-state centrally located within switching epoch to minimalize created harmonic distortion [24].

Table 1 Switching States of H-Bridge Z-Source Inverter (! *Sx* is Complement of *Sx)*

State (output voltage)	**S_1**	**S_3**	**S_4**	**S_6**
Active {10} (non-zero)	1	0	0	1
Active {01} (non-zero)	0	1	1	0
Null {00} (zero)	0	1	0	1
Null {11} (zero)	1	0	1	0
Shoot-through H1 (zero)	1	1	S_3	$!S_3$
Shoot-through H2 (zero)	S_1	$!S_1$	1	1
Shoot-through H3 (zero)	1	1	1	1

For ZSI ("Z"-Source Inverter) modulation, extra "shoot-through" states are cautiously added to null intervals by active interval retained constant and centrally located contained by switching epoch to keep all harmonic assistances of central "active"-state placement. The "shoot-through' states must if possible have similar time interval to minimalize size of "Z"-source network inductors [5], and must be added directly adjacent to instants of state transitions of a conventional VSI (Voltage Source Inverter) to confirm a sole device switching/state transition. Consequently, for a 1-phase ZSI ("Z"-Source Inverter) by 2-state transitions/switching cycle, quantity of equal-interval ($0.5T_0$) "shoot-through" states that can be implanted is two. Their presences are revealed in Figure 7 [25].

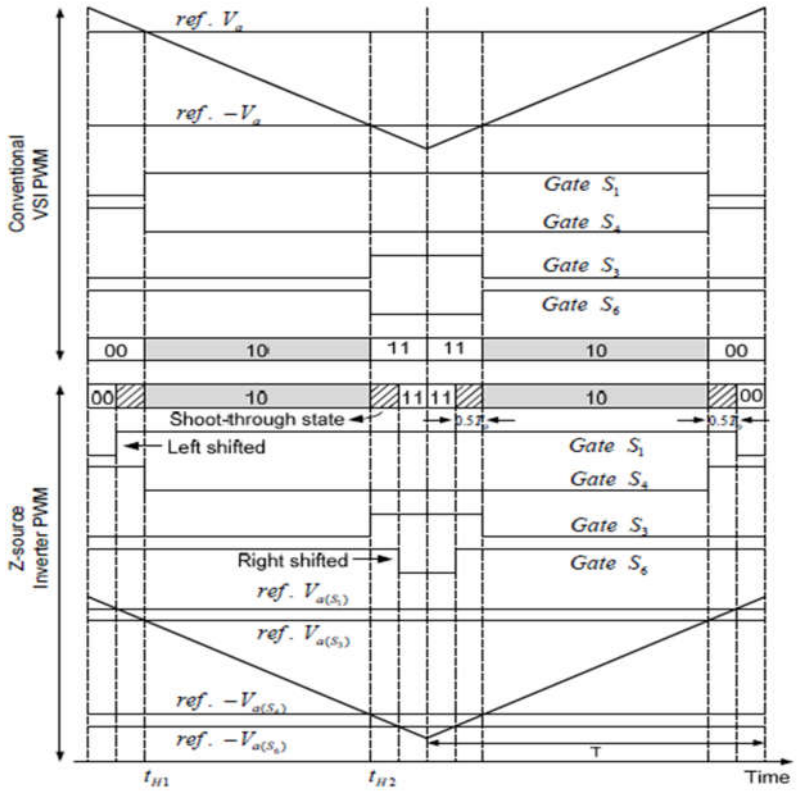

Figure 11 Modulation of H-Bridge ZSI

So as to build preferred state system in Figure 7 over carrier-based employment on the subject of two reference/carrier comparison diagrams in Figure 11, preparation of modulating reference-signals are desirable for carrier-based ZSI ("Z"-Source Inverter) modulation. For a conventional VSI (Voltage Source Inverter), reference-signals used are $\{V_a = M \cos(\omega t)\}$ for modulating phase-leg $\{S_1, S_4\}$, and $-V_a$ for phase-leg $\{S_3, S_6\}$. In common, 1st state transition through falling carrier edge happens when maximum of 2-signals $\{V_{max} = \max(V_a, -V_a)\}$ crosses falling grade of carrier at time (t_{H1}).

So as to inset a "shoot-through" state adjacent to this transition as of t_{H1}-0.5T_o to t_{H1}, lower (even-numbered) and upper (odd-numbered) switches of relevant phase-leg must consequently be modulated by means of;

$$V_{max(SX)} = V_{max} + \frac{T_0}{T}$$
$$V_{\max(SY)} = V_{max} \quad (9)$$
$$\{X, Y\} = \{1, 4\} \; or \; \{3, 6\}$$

Where, $\{V_{max\,Sx}\}$ causes upper switch to turn "ON" at $\{t_{H1} - 0.5T_0\}$ and $V_{max\,SY}$ causes lower switch to turn "OFF" at t_{H1}. Noticeably, these switching activities inset anticipated "shoot-through" state (H-1), as exemplified in lower half of Figure 9.

Subsequent over and done by means of analogous investigation, 2nd "shoot-through" state H-2 can be implanted from $\{t_{H2}\}$ to $\{t_{H1} + 0.5T_0\}$ by means of subsequent adapted reference-signals for regulatory other 2-switches;

$$V_{min(SX)} = V_{min} - \frac{T_0}{T}$$

$$V_{\min(SY)} = V_{min} \quad 10$$
$$\{X, Y\} = \{1, 4\}\ or\ \{3, 6\}$$

Where, $\{V_{min} = \min (V_a, -V_a)\}$ signifies least of (V_a) and ($-V_a$). Deprived of alteration, similar derived (eq. 9) and (eq. 10) can too be used for confirming correct inclusion of "shoot-through" states all through growing carrier edge.

For a 3-phase-leg VSI (Voltage Source Inverter), together continuous switching (e.g., centered SVM) and intermittent switching (e.g., 60° –discontinuous PWM (Pulse Width Modulation)) are probable through each having its individual exclusive null placement at start and end of a switching cycle and physiognomy harmonic spectrum. Analogous to derivation of PWM (Pulse Width Modulation) switching pattern for H-bridge ZSI ("Z"-Source Inverter), it is probable to derive numerous PWM (Pulse Width Modulation) approaches for a 3-phase-leg ZSI ("Z"-Source Inverter) [25].

Boosting Techniques: In earlier division it was stated that "shoot-through" states can be bring together into a VSI (Voltage Source Inverter) - PWM (Pulse Width Modulation) switching pattern. This segment provides a brief description of probable boosting techniques for a 3-phase ZSI ("Z"-Source Inverter) D.C. - link voltage (v_{dc}) based on [18] and [19].

In [5], a simple boosting-technique was used to control shoot-through duty ratio. Figure 12 demonstrates simple boosting technique that works a straight line (V_P) equivalent to or better than maximum value of 3-phase allusions to make known to shoot-through duty ratio in a traditional sinusoidal PWM (Pulse Width Modulation). Now, if triangular-carrier signal is better than V_P or lesser than V_N, the ZSI ("Z"-Source Inverter) is in "shoot-through" state. The ZSI ("Z"-Source Inverter) sustains six "active"-states unchanged as in traditional carrier based PWM (Pulse Width Modulation) control. In lieu of this simple boosting technique, attainable shoot-through duty ratio diminutions by means of rise of Modulation Index (M). The peak shoot-through duty ratio of simple boosting technique is inadequate to (1-M), therefore reaching zero (0) at a Modulation Index (M) of one. So as to produce an output voltage that necessitates a HV (high voltage) gain, a minor Modulation Index (M) has to be used. On the other hand, minor Modulation Index (M) consequence in better voltage stress on devices.

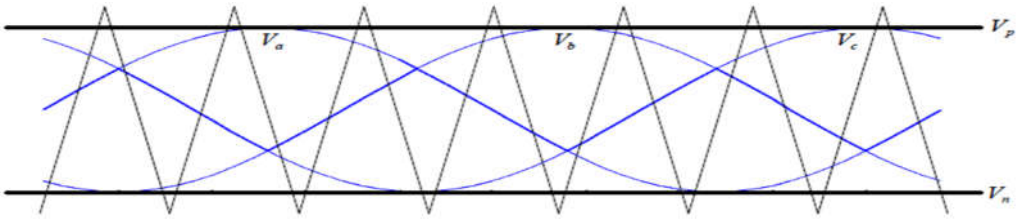

Figure 12 Simple Boosting PWM Generation Wave-forms of ZSC

Based on (eq. 3.8), voltage gain of ZSI ("Z"-Source Inverter) can be inscribed as

$$G = \frac{V_{ac}}{V_g/_2} = MB = \frac{M}{2M-1} \quad 11$$

As investigated in [5], voltage stress $\{V_S\}$ (Figure 10) transversely switches is BV_g. The voltage stress beneath simple boosting modulation technique can be intended by;

$$V_S = BV_g = (2G - 1)V_g \quad 12$$

The voltage stress transversely a switch against voltage gain is plotted in given Figure 13. With simple boosting technique, voltage stress transversely switches is quite high, which will limit attainable voltage gain due to restriction of device voltage ratings.

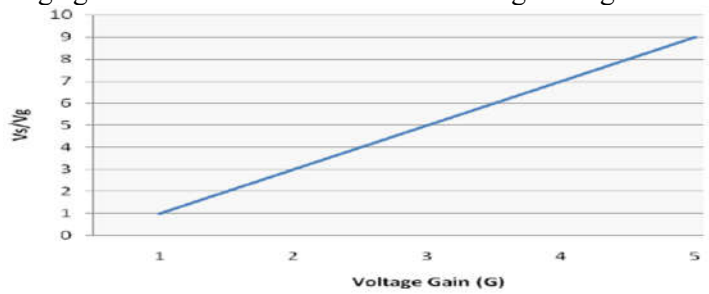

Figure 13. Switch Voltage Stress vs. Voltage Gain in Simple Boosting Technique

Figure 14 demonstrations maximum boosting approach elucidated as an alternative to simple boosting technique. It is moderately akin to traditional carrier based PWM (Pulse Width Modulation) control technique. This control technique retains six "active"-states unchanged and turn all zero-states into "shoot-through" states. In consequence maximum boosting factor (B*)* is acquired for any given modulation index (M) deprived of distorting output wave-form. By way of can be seen as of Figure 13, circuit is in "shoot-through" state while triangular-carrier wave is one or the other better than peak curve of allusions (V_a, V_b and V_C) or lesser than peak of allusions. The voltage stress (V_S) for maximum-boosting technique is derived as;

$$V_S = BV_g = (\frac{3\sqrt{3G}}{\pi} - 1)V_g \quad 13$$

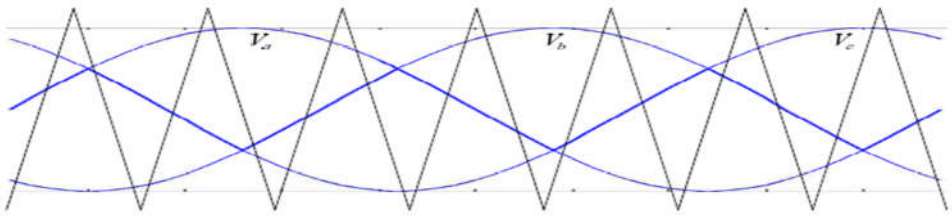

Figure 14 Maximum Boosting PWM Generation Wave-forms of ZSC

The voltage stress (V_S) versus voltage gain for maximum boosting technique is revealed in Figure 14. Equated with simple control technique, revealed in Figure 12, voltage stress (V_S) in maximum boosting technique is much lesser, which means that inverter can be functioned to acquire a higher voltage gain.

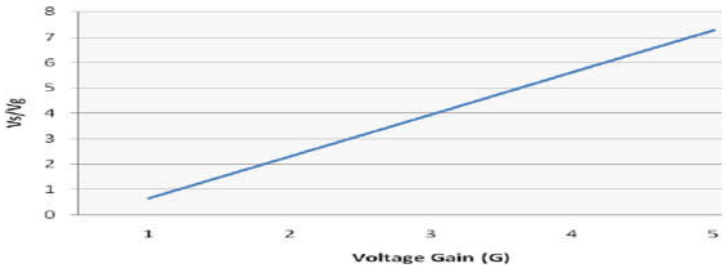

Figure 15 Switch Voltage Stress vs. Voltage Gain in Maximum Boosting Technique

The maximum boosting technique can attain minimum voltage stress transversely switches. On the other hand, it has shortcomings of low-frequency ripples on "*Z"*-source network, which is revealed. Additional boosting technique suggested attaining maximum probable voltage boost/gain whereas retaining a constant boost observed as of "*Z"*-source network and generating no low-frequency ripples allied by means of output frequency is elucidated.

Figure 16 demonstrations sketch map of constant boosting technique suggested, which attains maximum voltage gain whereas always observance "shoot-through" duty ratio constant. There are 5-modulation curves in this control technique: 3-allusion signals {V_a, V_b and V_C}, and 2-"shoot-through" envelope signals {V_P and V_N}. When carrier triangle-wave is greater than upper "shoot-through" envelope {V_P} or lowers than bottom "shoot-through" envelope {V_N} inverter is turned to a "shoot-through" zero state. In amid, inverter switches in similar way as in traditional carrier based PWM (Pulse Width Modulation) control.

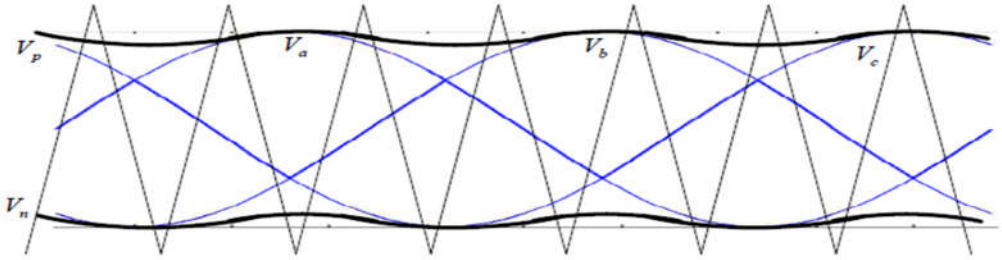

Figure 16. Constant Boosting PWM (Pulse Width Modulation) Generation Wave-forms of ZSC

For 1st half-epoch, {0, π/3} in Figure 16, upper envelope curves and lower envelope curves can be conveyed by (eq. 14) and (eq. 15), correspondingly.

$$V_{P1} = \sqrt{3}M + \sin(\theta - \frac{2\pi}{3})\, M \qquad for\ 0 < \theta < \frac{\pi}{3} \qquad 14$$

$$V_{N1} = \sin(\theta - \frac{2\pi}{3})\, M \qquad for\ 0 < \theta < \frac{\pi}{3} \qquad 15$$

For 2nd half-epoch [π/3, 2π/3], envelope curves are conveyed by (eq. 16) and (eq. 17), correspondingly.

$$V_{P2} = \sin(\theta)\, M \qquad for\ \frac{\pi}{3} < \theta < \frac{2\pi}{3} \qquad 16$$

$$V_{N2} = \sin(\theta)\, M - \sqrt{3}M \qquad for\ \frac{\pi}{3} < \theta < \frac{\pi}{3} \qquad 17$$

The voltage stress (V_S) for constant boosting technique was derived in as

$$V_S = BV_g = (\sqrt{3}G - 1)V_g \qquad 18$$

By way of can be realized from Figure 17, constant boosting technique has an ample lower voltage stress (V_S) across devices than simple boosting technique, whereas having a slightly greater voltage stress (V_S) than maximum boosting technique. The idyllic voltage stress (V_S) ratio is one. The constant boosting technique is very necessary for applications necessitating a voltage gain of two to three. As well constant boosting technique needs minimum capacitance and inductance since inductor current and capacitor voltage comprise no low frequency

ripples allied with output voltage, therefore diminishing price, capacity, and weightiness of "Z"-source network.

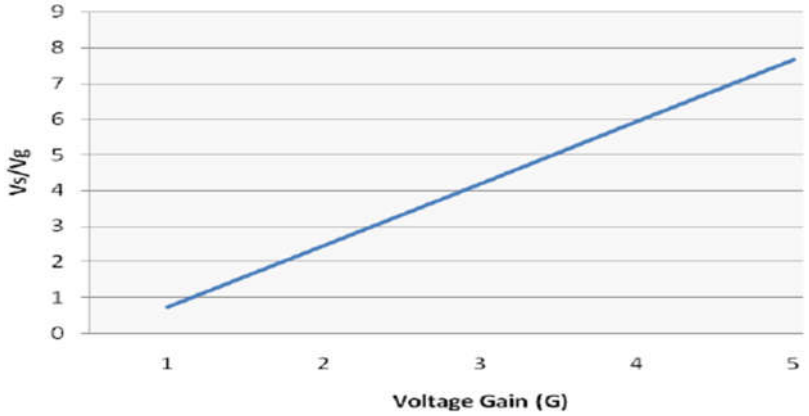

Figure 17 Switch Voltage Stress vs. Voltage Gain in Constant Boosting Technique

3. Three Phase Induction Machine

The attractiveness of 3-phase (IM) Induction Machines on board ships is due to their easy, vigorous construction, and great reliability aspect in sea surroundings. A 3-phase (IM) Induction Machines can be used for not the same applications using several speed and load necessities. Electric machines can be set up in very nearly every single production process nowadays. In receipt of utmost out of your application is becoming progressively significant so as to confirm economical operations. The 3-phase (IM) Induction Machines are utmost broadly used electric machines in industry. They run at fundamentally constant-speed since No-load to full-load. On the other hand, speed is frequency reliant and as a result these machines are not simply modified to speed control. We typically select D.C. machines when enormous speed dissimilarities are requisite. On the other hand, 3-phase (IM) Induction Machines are easy, rough, low-costing, simple to maintain and can be contrived with physiognomies to suit utmost industrial necessities. Similar to any electric machine, a 3-phase (IM) Induction Machine has a rotor and a stator. The stator brings a 3-phase winding (entitled stator winding) whereas rotor brings a short-circuited winding (entitled rotor winding). Merely stator winding is fed as of 3-phase power supply. The rotor winding arise its voltage and power as of outwardly energized stator winding over and done with electromagnetic induction and from now name. The IM (Induction Machine) may be well thought-out to be a transformer by means of a rotating secondary and it can, consequently, be designated as a "transformer kind" A.C. machine in which electrical energy is transformed into mechanical energy.

The 3-phase IM (Induction Machine) is utmost broadly used electrical machine. Almost 80 percent of mechanical power used by diligences is on condition that by 3-phase IM (Induction Machine) due to its easy and rugged edifice, low price, decent working physiognomies, nonexistence of commutator and decent speed regulation. In 3-phase IM (Induction Machine) power is conveyed from stator to rotor winding over and done with induction. The Induction machine is also so-called asynchronous machine as it runs at a speed other than synchronous (N_S) speed. Similar any another electrical motor/induction machine also have 2-main parts specifically stator and rotor. A 3-phase IM (Induction Machine) has 2-main parts (i) rotor and (ii) stator. The rotor is detached from stator by a minor air-gap which ranges from 0.4

millimetre to 4 millimetres, dependent on power of machine. The core body of Induction Machine includes of 2-major parts as displays in Figure 18;

1. Shaft is made-up of steel and it is for conveying torque to load.
2. There is a minor distance amid stator and rotor which typically differs from 0.4 millimetres to 4 millimetres. Such a distance is so-called air-gap.
3. One of difficulties with electrical motor is creation of heat through its revolution. In order to overwhelm this problem we want fan for cooling.
4. Bearings are used for supporting revolving shaft.
5. For getting external electrical linking, Terminal box is desirable.

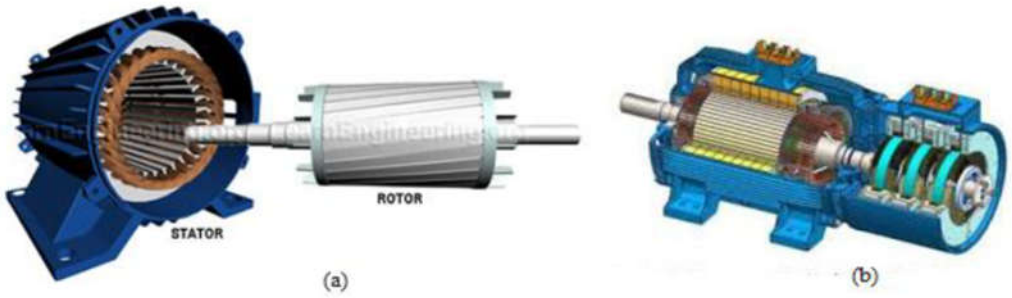

Figure 18. 3-Phases Induction Machine (a) Squirrel Cage Rotor (b) Slip Ring Rotor

4. PID Controller

PID controllers are in all probability the mainly commonly used controller structures in industry. They do, though present several challenges to control and instrumentation engineers in the aspect of tuning of the gains required for stability and good transient presentation. There are several dictatorial rules used in PID tuning. An example is that planned by Ziegler and Nichols in the 1940's.A proportional–integral–derivative controller (PID controller) is a generic control Path feedback mechanism (controller) broadly used in industrial control system. Here with the help of PID controller calculates an "error" value as the difference between a measured process variable and a required set point. The controller attempts to decrease the error by adjusting the process control inputs.

The PID controller estimate (algorithm) to involve three separate steady parameters, and is accordingly sometimes called three-term control.

The Proportional, the Integral and Derivative, represented as P, I, and D. these values can be derived in terms of time: P depends on the recent error, I on the accretion of past errors, and D is a prophecy of future errors, depends on current rate of alteration.

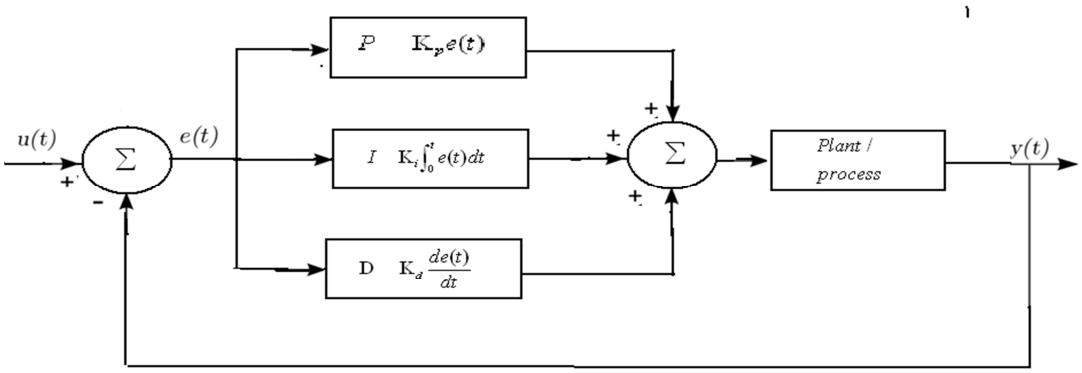

Figure 19. Basic PID Controllers

In the absence of knowledge of the fundamental process, a PID controller has traditionally been considered to be the most excellent controller.

Various applications may involve using only one or two actions to provide the appropriate system control. It can be achieved by setting the other parameters to 0. PI controllers are quite common, because derivative action is sensitive to measurement noise, while the nonexistence of an integral term may prevent the system from reaching its target value due to the control action.

Defining $u(t)$ as the controller output, the concluding structure of the PID algorithm is:

$$u(t) = MV(t) = K_P e(t) + K_i \int_0^t e(T)\,dt + K_d \frac{d}{dt} e(t) \qquad 19$$

Where,
K_P: Proportional gain, a tuning parameter
K_i: Integral gain, a tuning parameter
K_d: Derivative gain, a tuning parameter
e: Error = SP - PV
t: Time or instantaneous time (the present)
T : varying of integration; lies on values from time 0 to the present t.

Conclusion

The basic fundamental and research study of PID speed controller; Three Phase Induction Machine, Z-Sources Converter is exemplified in research paper. The ZSC (Z-Source Converter) overwhelms intangible and hypothetical obstructions and confines of traditional VSC (Voltage-Source Converter) and CSC (Current-Source Converter) and gives a progressive power conversion idea.

References

[1] Fang Zheng Peng, "Z- Source Inverter", IEEE Transaction on Industry Applications. 39: 2003, 2. Wuhan, China.
[2] Miaosen Shen, Jin Wang, Alan Joseph, Fang Zheng Peng, Leon M. Tolbert, and Donald J. adams, "Constant Boost Control of the Z-Source Inverter to Minimize Current Ripple and Voltage Stress", IEEE Transactions on industry application vol. 42, no. 3, May/June 2006.
[3] S. Rajakaruna, Member, IEEE and Y. R. L. Jayawickrama, "Designing Impedance Network of Z-Source Inverters" IEEE Transactions on industry application.

[4] G. Pandian and S. Rama Reddy, "Embedded Controlled Z Source Inverter Fed Induction Motor Drive" IEEE transaction on industrial application, vol.32, no.2, May/June 2010.
[5] K. Srinivasan and Dr. S. S. Das, "Performance Analysis of a Reduced Switch Z-Source Inverter fed IM Drives", Journal of Power Electronics, Vol. 12, No. 2, May/June 2010.
[6] Omar Ellabban, Joeri Van Mierlo and Philippe Lataire, "Comparison between Different PWM Control Methods for Different Z-Source Inverter Topologies" IEEE Transactions on industry application, May/June 2010.
[7] K. Niraimathy, S. Krithiga, "A New Adjustable-Speed Drives (ASD) System Based On High-Performance Z-Source Inverter", 978-1-61284-379-7/11 2011 IEEE, 2011 1st International Conference on Electrical Energy Systems.
[8] Muhammad H. Rashid, "Power Electronics", Second Edition, Pearson Education.
[9] C.-G. Kim, J.-H.Lee, H.-W.Kim, and M.-J.Youn, "Study on maximum torque generation for sensor less controlled brushless DC motor with trapezoidal back ELECTRO MOTIVE FORCE," IEE Proc.-Electro. Power Appl., vol. 152, no. 2, pp. 277–291, Mar. 2005.
[10] J. H. Song and I. Choy, "Commutation torque ripple reduction in brushless dc motor drives using a single dc current sensor," IEEE Trans. Power Electron., vol. 19, no. 2, pp. 312–319, Mar. 2004.
[11] S. Wu, Y. Li, X. Miao, "Comparison of Signal Injection Methods for sensor less control of PMSM at Very Low Speeds", IEEE Power Electronics Specialists Conference, PESC 2007, June 2007 pp. 568 – 573.
[12] M. Eskola, H. Tuusa, "Sensor less Control of Salient Pole PMSM Using a Low – Frequency Signal Injection", European Conference on Power Electronics and Applications, Sept. 2005, pp. 1- 10.
[13] S. Ogasawara, H. Akagi, "An Approach to Real-Time Position Estimation at Zero and Low Speed for a PM Motor Based on Saliency", IEEE Transactions on Industry Applications, Vol. 34, No. 1, Jan./Feb 1998, pp. 163-168.
[14] Joohn Sheok Kim, Seung Ki Sul, "New Stand-Still Position Detection Strategy for PMSM Drive without Rotational Transducers", Conference Proceedings of the Ninth Annual Applied Power Electronics Conference and Exposition, APEC '94., Vol. 1, 13-17 Feb. 1994, pp.363 – 369.
[15] US Patent No.4654566, "Control system, method of operating an electronically commutated motor, and laundering apparatus," granted to GE.
[16] T. Endo, F. Tajima, et al., "Microcomputer Controlled Brushless Motor without a Shaft Mounted Position Sensor," IPEC-Tokyo, 1983.
[17] K. Rajashekara, A. Kawamura, and K. Matsuse, "Sensorless Control of AC Motor Drives," IEEE Press, 1996.
[18] S. Ogasawara and H. Akagi, " An Approach tp Position Sensorless Drive for Brushless dc Motors," IEEE Trans. on IA, Vol.27, No.5, Sept/Oct. 1991.
[19] US Patent 5859520, "Control of a Brushless Motor", granted to STMicroelectronics.
[20] STMicroelectronics Application Note AN1130, "An Introduction to Sensorless Brushless DC Motor Drive Applications with the ST72141," website www.st.com.
[21] J. Johnson, "Review of Sensorless Methods for Brushless DC," IAS annual meeting 1999, pp143-150.
[22] Bimal K. Bose, Modern Power Electronics and AC Drives,. Prentice Hall Publishers, 2001.
[23] Dr. P.S. Bimbhra. Power Electronics, Khanna Publishers, New Delhi, 2003. 3rd Edition.
[24] M.H. Rashid, A Power Electronics Handbook Academic Press 2001.
[25] M. D. Sing "power electronics" Khanna Publishers, New Delhi, 2003. 3rd Edition.