Enhancement of Power Quality using Dynamic Voltage Restorer

R.Maheswar Reddy[1], R, Kannan[2], P Umapathi Reddy[3], B.Subba Redy[4],
[1]Assistant Professor, Dept.Of EEE, Sree Vidyanikethan Engineering College, Tirupati, A.P. India
[2] Associate Professor, Dept.Of EEE, Annamalai university, Chidambaram, T.N. India
[3] Professor, Dept.Of EEE, Sree Vidyanikethan Engineering College, Tirupati, A.P. India
[4] Assistant Professor, Dept.Of EEE, Sree Vidyanikethan Engineering College, Tirupati, A.P. India
Email: mahi0232@gmail.com, kannanr79@gmail.com, subbu452@gmail.com, moni_uma@gmail.com

Abstract— The Dynamic Voltage Restorer (DVR) is the most efficient and effective modern Custom Power Device used in power distribution networks. The Dynamic Voltage Restorer protects consumers against sudden changes in voltage amplitude. Its appeal includes lower cost, smaller size and its fast dynamic response to the disturbance. When voltage sags/swells occur due to faults and some load switching, DVR has to detect the problem and inject appropriate voltage component as soon as possible. Hence, it can provide the most commercial solution to mitigation voltage sag. The paper presents modeling, analysis and simulation of a Dynamic Voltage Restorer using MATLAB.

Index Terms: **Dynamic Voltage Restorer, Power Quality, Voltage Swell/Sag.**

1. INTRODUCTION

Present-day electric power systems are complicated systems with thousands of load centers and many generating stations are interconnected through long power distribution and transmission networks. Power quality is major concern in industries present day due to vast losses in energy and money. The two major challenges that the trendy power system should deals with is voltage fluctuations and short circuit faults. With the advent of myriad sophisticated electrical and electronic equipment, like Programmable Logic Controllers, Computers and Adjustable Speed Drives that are terribly sensitive to non-linear loads and disturbances at distribution systems produces several Power Quality problems like voltage sags, swells, and harmonics and therefore the purity of sin wave is lost.

The customers ought to be supplied with an uninterrupted flow of energy at smooth sinusoidal voltage at the contracted magnitude level and frequency by power distribution systems. With wide use of nonlinear loads, the grid suffers from fluctuations in voltage, voltage unbalance, and different power quality problem. The fast proliferation of renewable power generation sources within the grid has augmented these power quality issues. Voltage sags are one in all the foremost occurring power quality problems. They obtain more often and generate severe issues and economical losses. The mechanical switch is also on a concept, via signals from a supervisory control and data Acquisition System, with some temporal arrangement schedule, or with no switching at all. the disadvantage is that, high speed transients can't be compensated. Some sag doesn’t seem to be corrected at intervals the restricted timeframe of mechanical switch devices.

These apparatus alleviate voltage sags/swells originated from supply side and improve power quality of customers, especially critical customers, at distribution level. There are different types of Custom Power Devices such as Dynamic Voltage Restorer, Distribution Static Synchronous Compensators, Static VAR Compensator and Uninterruptible Power Supplies. Each of them has its own benefits and drawbacks. Among all of these devices, DVR is considered to be the more efficient and effective one for voltage sag/swell reduction. DVR is a series compensator which injects voltage to the Point of Common Coupling to maintain the voltage of sensitive load at nominal voltage. DVR can also have some other features like harmonics elimination and power factor correction [1]-[2]. The DVR applications are mainly for sensitive loads that may be extremely influenced by fluctuations in system voltage. To maintain voltage stability by reduce the voltage sag by injecting appropriate voltage component into the system by using Dynamic Voltage Restorer with PI controller and PWM technique by using MATLAB software

2. POWER QUALITY

The power quality is badly disrupted due to the extensive use of nonlinear and dynamic loads and various faults in power system. Moreover, the electronic devices and controlling apparatus based on computer technology demand higher levels of power quality. This type of equipments are sensitive to small changes of power quality, a short time change on PQ can give rise to great economical losses. Because of the two causes mentioned above, no matter for the power business, electric power customers or for equipment manufacturers, power quality problems had become an issue of increasing interest. Under the situation of the deregulation of power industry and competitive market, as the main character of goods, power quality will affect the price of power directly in near future.

2.1. Need of Power Quality

i. New-age loads that use microprocessor and microcontroller based controls and Power electronic devices, are more sensitive to power quality variations than that equipments used in the past.

ii. The demand for increased overall power system efficiency resulted in continued growth of Devices such as shunt capacitors and high-efficiency adjustable-speed motor drives for power factor correction to drain losses. This is resulting in increasing harmonic level on power systems and has many persons interested about the future influence on system capabilities.

iii. End users have an increased awareness of power quality problems. Utility customers are happen to be better informed about such issues as sags, interruptions, and switching transients are challenging the utilities to improve the quality of power delivered.

2.2. Power Quality problems and their impacts:

2.2.1 Voltage sag (dip):

A reduction of the normal voltage level between 10 and 90% of the nominal rms voltage at the power frequency, for durations of 0.5 cycles to 1 minute as shown in the Fig. 1. Defects on the distribution or transmission network (many of the times on parallel feeders), imperfection in consumer's installation, Connection of heavy loads and start-up of large motors. Impairment of information technology appliances, namely microprocessor-based control systems (PCs, PLCs, ASDs, etc) that may gives rise to a process ending. Tripping of contactors and electromechanical relays, disconnection and loss of efficiency in electric rotating machines.

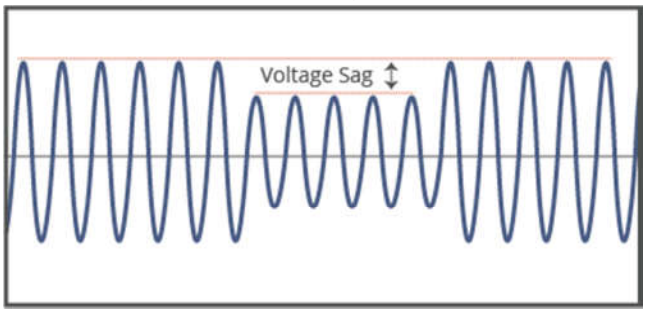

Figure1. RMS representation of Voltage Sag

2.2.2 Voltage swells:

The quick increase of the voltage, at the power frequency, outside the normal tolerances, with duration of more than one cycle and typically less than a few seconds as shown in the Fig. 2. Start/stop of heavy loads, badly regulated transformers, badly diminished power sources (mainly during off-peak hours).Data loss, flickering of lighting and screens, termination or destruction of sensitive apparatus, if the voltage values are too high.

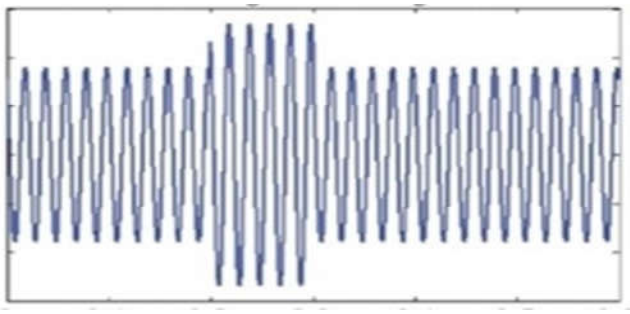

Figure2. RMS representation of Voltage Swell

2.2.3 Harmonic distortion:

Voltage or current waveforms are assumed to be non-sinusoidal shape. The waveform corresponds to the sum of individual sine-waves with respective magnitude and phase, having frequencies that are multiples of power-system frequency. Classic sources: rectifiers, arc furnaces, welding machines, electric machines working above the knee of the magnetization curve (magnetic saturation), and DC brush motors. Modern sources: all non-linear loads, such as power electronics equipment including ASDs, switched mode power supplies, data processing equipment, high efficiency lighting. Increased chance in occurrence of resonance, overheating of all cables and equipment, neutral overload in the 3-phase systems, loss of efficiency in electric machines, electromagnetic interference with communication systems, nuisance tripping of thermal protections, errors in measures when using average reading meters.

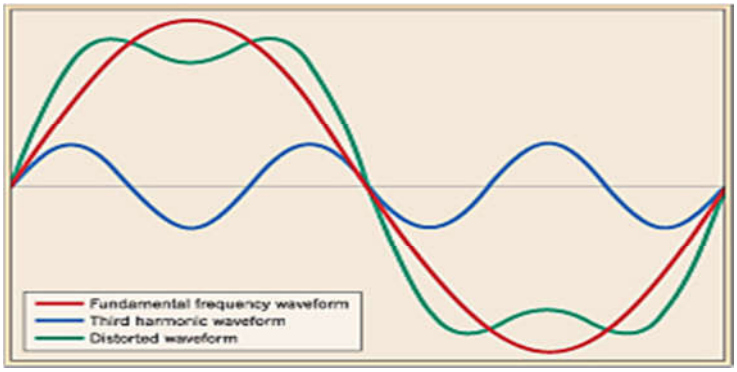

Figure 3.Harmonic Distortion

2.2.4 Voltage fluctuations /flicker:

Oscillation of voltage value, amplitude regulated by a signal with frequency of 0 to 30 Hz. Arc furnaces, frequent start/stop of electric motors (for instance elevators), oscillating loads are reasons of flickers. Many consequences are leading to under voltages. The most noticeable consequence is the flickering of lighting and screens, giving the impression of unsteadiness of visual percipience [3]-[6].

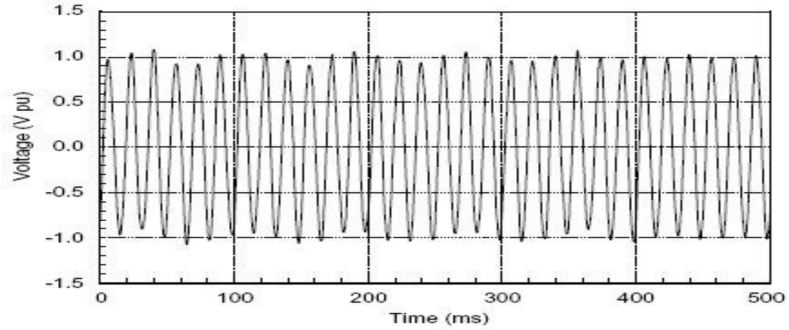

Figure 4.Voltage Fluctuations or Flicker

3. DYNAMIC VOLTAGE RESTORER

Among the power quality issues, voltage sags are the very critical disturbances. With regard to overcome these issues the idea of Custom Power Devices are instituted recently. One of those devices is the Dynamic Voltage Restorer (DVR), which is the best efficient and effectual modern Custom power device used in power distribution systems. DVR is a suggested series connected solid state device and is normally installed in a distribution network among the supply and the critical load feeder at the Point of Common Coupling (PCC) as shown in Fig. 4. It has a series of voltage boost technology using solid state switches of 3-phase VSC that injects voltage into the system; to bring back the load side voltage for compensating voltage sags/swells. Other than voltage sags and swells compensation, DVR can also have some other features like line voltage harmonics compensation, reduction of transients in voltage and fault current limitations[7] -[9].

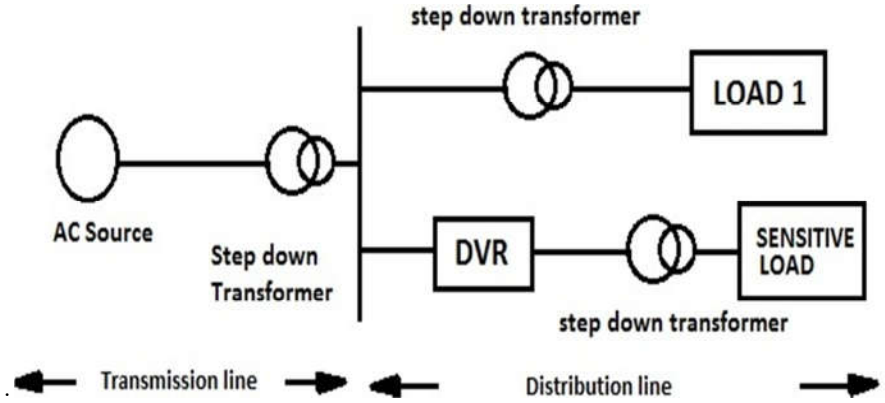

Figure 5. Location of DVR

3.1. Principle of operation of DVR

The critical loads from all supply side disturbances other than outages are protected by a power electronic converter based series compensator called a Dynamic Voltage Restorer (DVR). This device employs IGBT solid state power electronic switches in a PWM inverter structure [6]. The DVR is capable of generating or absorbing independently controllable real and reactive power at its ac output terminal. Like in a DSTATCOM, the DVR is made of a solid-state DC to AC switching power converter that injected a set of three-phase ac output voltages in series and synchronism with the distribution feeder voltages.

The amplitude value and phase angle of the injected voltages are changeable thereby allowing control of the real and reactive power exchange among the DVR and the distribution network. The DC input terminal of a DVR is brought into contact with an energy source or an energy storage device of appropriate capacity as shown in the Fig. 5. The reactive power transferred between the DVR and the distribution network is internally produced by the DVR without ac passive reactive components. The real power transferred at the DVR output ac terminal is provided by the DVR input dc terminal by an external energy source or energy storage system.

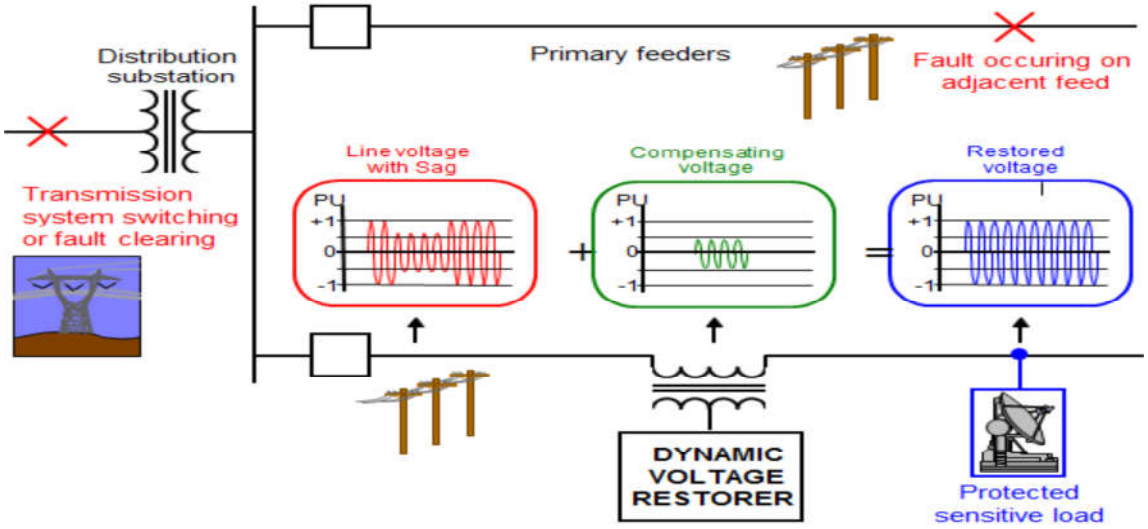

Figure 6. Working principle of DVR [2].

4. SIMULATION AND RESULTS

The test system used to take out the simulations regarding the DVR actuation. This system is composed by a 13kV, 50Hz generation system, stated by a Thevenin's equivalent, feeding two transmission lines through a two winding transformer connected in Y/Δ, 13kV/115kV. Such transmission lines feed two distribution networks through two transformers connected in Δ/Y, 115kV/11 kV.

Table 1. System parameters

S.No.	System Quantities	Standards
1.	Three phase source	250MVA,13kV, 50Hz.
2.	Step-up Transformer Step- down Transformer	100MVA, Y-Δ, 13kv/115kV, 50Hz 100MVA, Δ-Y, 115kV/11kV, 50Hz
3.	Transmission line parameter	R=0.001 ohms, L=0.005 H
4.	Load 1 &2	1KW, 500VAR
5.	Inverter	IGBT based, 3 arms, 6 pulses,Carrier frequency= 1080 Hz, Sample time = 5μs
6.	PI controller	K_p=0.5,K_i=50 and Sample time=50 μs
7.	DVR Generator	10KVA, 7kV, 50Hz
8.	DC link capacitor	750Mf
9.	Linear/Isolation transformer	1:1 turns ratio, 11/11kV
10.	Filter inductance Filter capacitance	100mH 100μF

4.1 System SIMULINK Models and Results

The Fig.7. Shows the general power system network with source voltage of 13kV at 50 Hz Frequency. So as to put forward a general power system, voltage level is elevated to 115kV and three phase impedance is connected in series with transformer so as to represent the line impedance. Then, voltage level is diminished to meet the load requirement. Now simulation is carried out with the sample time of 0.1 seconds. Fig. 8(a) & (b) shows the output phase to phase voltage and three phase voltage at load. As there is no voltage sag or fault in the power system, the output voltages are similar to that of source voltage in phase and magnitude.

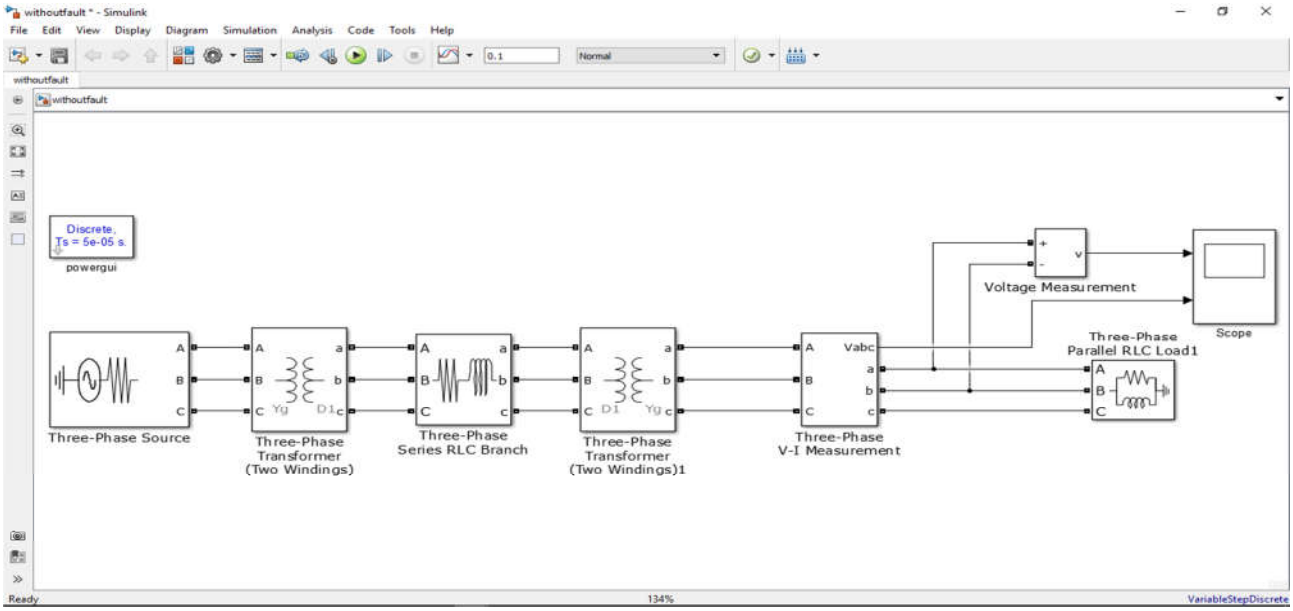

Figure 7. General Power System Network

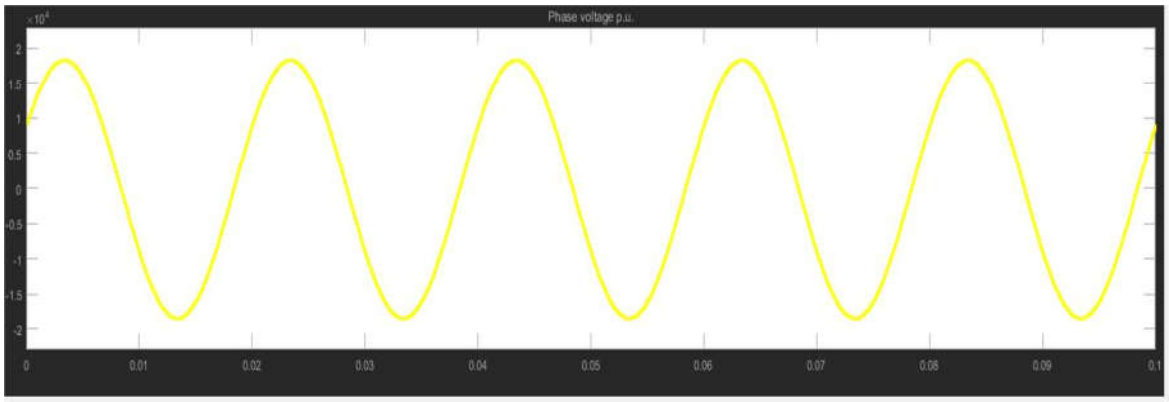

Figure 8 (a) Phase –Phase Voltages at load point

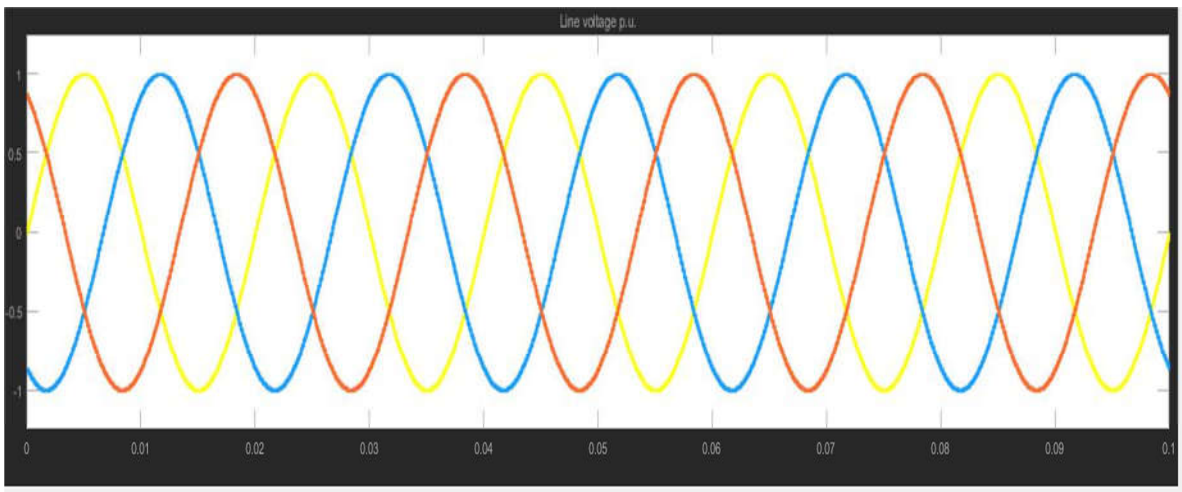

Figure 8 (b). Three-Phase Voltages at load point

By using the same power system network and simulation is carried out by creating a three-phase fault in the system near the load as shown in the Fig. 9. The duration of three phase fault is of 0.04 seconds

and fault of type L-L-L Fault. Fig. 10(a) & (b) represents the line voltage and three phase load voltages. From Fig 10, it is observed that there is decrease in voltage level from 1 p.u. to 0.25 p.u. during the interval of 0.02 sec to 0.06 sec. Due to this there is decrease in voltage in the power system. In order to increase the voltage that is decreased due to fault, we go using DVR. This DVR consists of power system network where voltage is injected in series to the line so as to compensate the fall in voltage due to fault.

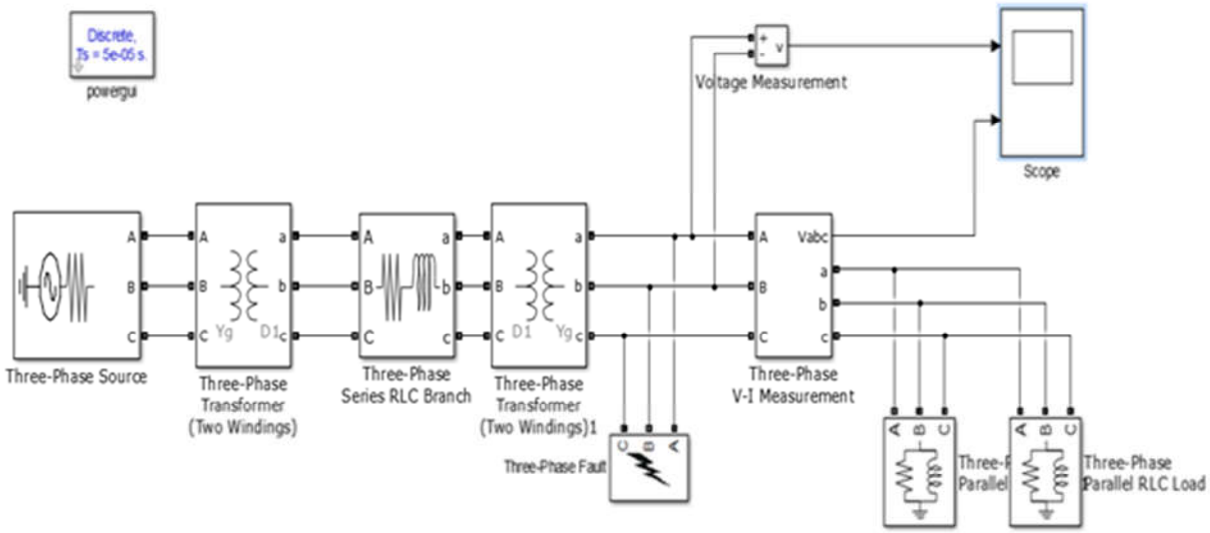

Figure 9. Power System Network without DVR

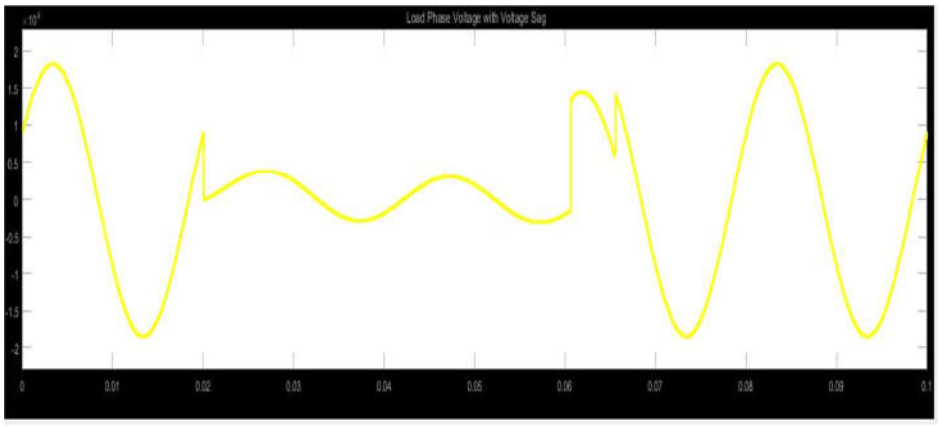

Figure 10 (a) Phase –Phase Voltages at load point Without DVR

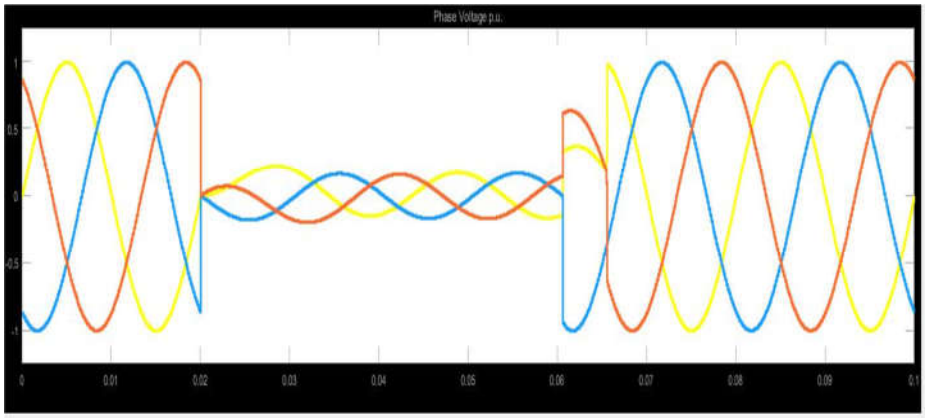

Figure 10 (b) Three-Phase Voltages at load point Without DVR

This Power system network with DVR model as shown in Fig. 11 mainly consists of an IGBT Inverter, PWM Generator Diode Converter, Series Transformer, Filter, Voltage regulator, unit delay. The working of DVR is as follows, whenever there is fall or decrease in voltage i.e. less than per unit then this value is forwarded to voltage regulator where it send signal to the PWM Generator to generate pulses to the gate of IGBT inverter with an unit delay. As the capacitor in the circuit stores the energy from the generating station until it reaches the full rated capacity. When the firing pulses are given to the IGBT inverter, the legs of the inverter start conducting according to their respective pulses given. As they start conducting, the voltage is injected in series into the line with the help of series transformer. The LC filter present in the circuit reduces the harmonics and voltage spikes in the power system. This model operates unless and until when there is even 1% fall in voltage i.e. it operates continuously and checks continuously for fall in voltage and adds voltage to the system even with the small variations in voltage. Next simulation is carried out at the same situation as above but a DVR is now launched at the load side to compensate the voltage sag occurred because of the three phase fault induced. When the DVR is in operation the voltage interruption is compensated entirely and the RMS voltage at the sensitive load point is kept at normal condition.

Power System network without DVR model doesn't have any compensating device to improve the voltage under sag condition. So compensating device called Dynamic Voltage Restorer (DVR) is employees to mitigate the sag developed which is created by three phase fault. Fig. 12(b) represents the load voltage waveform when faulty system is connected to DVR in series, which injects the voltage in the system to mitigate the sag. From the graph it is clear that sag that is developed has been mitigated but some small magnitude spikes are still present in the load voltage. Such kind of spikes are very difficult to eliminate. Special devices are to be employed to reduce such spikes. Fig. 12(a) shows the phase to phase volatge of load when system is subjected to connection of DVR in series with the line. Finally, from the above results, the DVR is able to generate the required voltage components for different phases rapidly and help to keep the balanced and constant load voltage at 1.00p.u throughout entire simulation time.

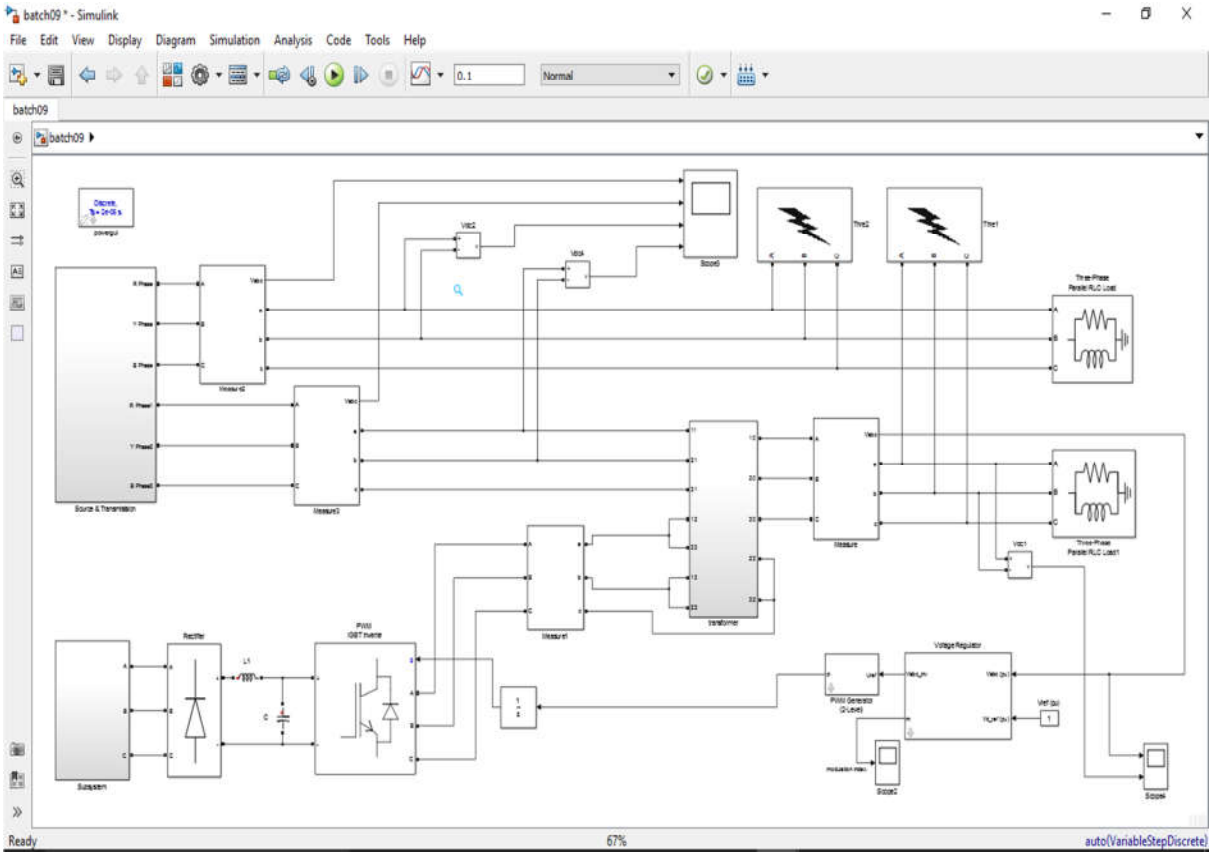

Figure 11. Power System Network with DVR

Here actual value of voltages is considered. So from the graph peak to peak voltages are shown along with the sag in voltage level. At the same time spikes in the waveforms are developed. So in order to reduce the spikes, a filter circuit is employed. This filter circuit reduces harmonics along with spikes. As DVR itself a active filter a large amount of spikes will be eliminated by DVR itself.

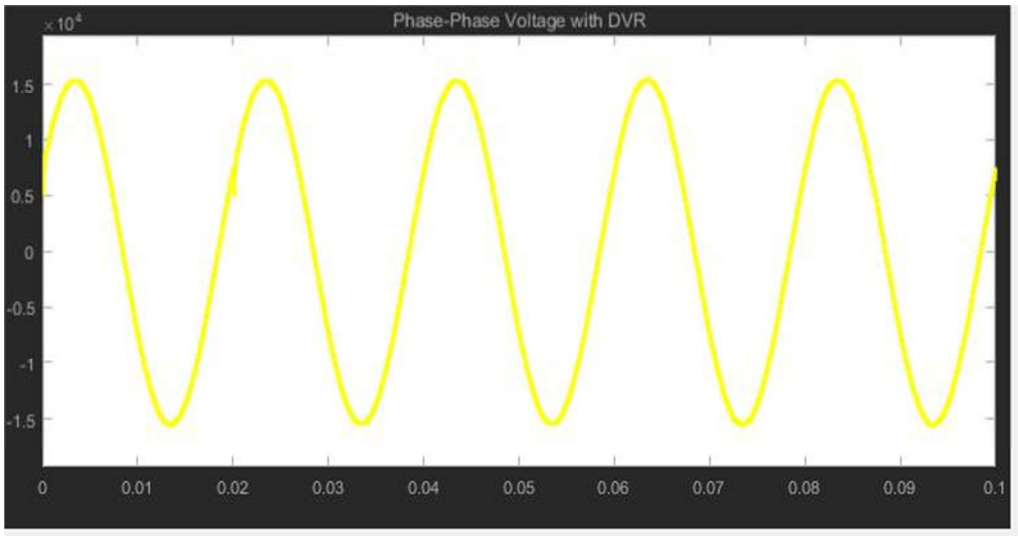

Figure 12 (a) Phase –Phase Voltages at load point with DVR

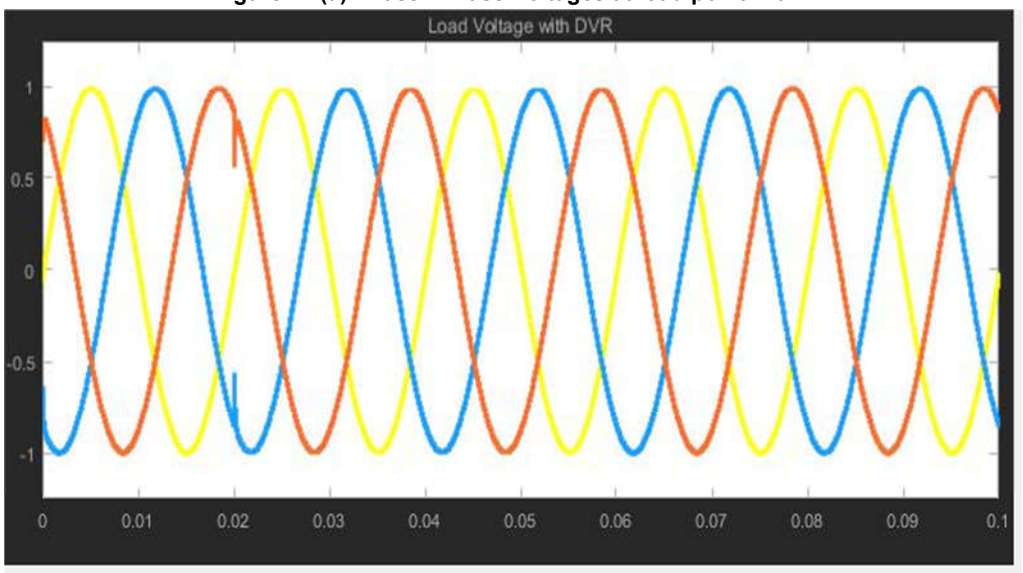

Figure 12(b) Three-Phase Voltages at load point with DVR

5. CONCLUSION

In order to show the performance of DVR in mitigation of voltage sags, simple distribution network is simulated using MATLAB. A DVR is connected to a system through a series transformer with a capability to insert a maximum voltage of 50% of phase to ground system voltage in which In-phase Compensation method is used. The main advantages of the proposed DVR are simple control, fast response and low cost. The proposed PWM control scheme using PI controller is efficient in providing the voltage sag compensation. DVR works independently of the type of fault as tested for the system as based on the analysis of test system DVR mitigates voltage sags due to three phase, single L-G and double line faults. The main shortcoming of the DVR, being a series device, is its inability to mitigate complete interruptions.

REFERENCES

[1] *H.P. Tiwari and Sunil Kumar Gupta, "Dynamic Voltage Restorer against Voltage Sag", International Journal of Innovation, Management and Technology, vol. 1, no. 3, pp. 232- 237, 2010.*

[2] *K.R.Padiyar, "Facts Controllers in Power Transmission and Distribution", New Age International Publishers, 2007.*

[3] *C. Benachaiba, and B. Ferdi, "Voltage quality improvement using DVR", Electrical Power Quality and Utilization, Journal Vol XIV, No. 1, pp. 39-45, 2008.*

[4] *M. H. J. Bollen, "Understanding Power Quality Problems—Voltage Sags and Interruptions" Piscataway, New York: IEEE Press, 2000.*

[5] *Gregory F. Reed, Masatoshi Takeda, "Improved power quality solutions using advanced solid-state switching and static compensation technologies," Power Engineering Society 1999 Winter Meeting, IEEE.*

[6] *G. Venkataramanan and B. Johnson, "A pulse width modulated power line conditioner for sensitive load centers," IEEE Trans. PowerDelivery, vol. 12, pp. 844–849, Apr. 1997.*

[7] *Chris Fitzer, Mike Barnes, Peter Green, "Voltage Sag Detection Technique for a Dynamic Voltage Restorer " IEEE Transactions on Power Delivery, Vol. 40, No. 1, pp. 203-212, January/February 2004.*

[8] *P. Boonchiam and N. Mithulananthan, "Understanding of Dynamic Voltage Restorers through MATLAB Simulation," Thammasat Int. J. Sc. Tech., Vol. 11, No. 3, July-Sept 2006.*

[9] *Z. Shuai, Peng Yao, Shen, ChunmingTu, Fei Jiang, Ying Cheng, "Design Considerations of a Fault Current Limiting Dynamic Voltage Restorer (FCL-DVR)", IEEE Transactions on Smart Grid, vol. 6, no. 1*, pp.14-25, Jan. 2015.