Design and Vibration Analysis of Mounting Bracket With Shock Isolators

[1]Vajhula Naga Sai Krishna Rohit, [2]R Seetharaman
Department of Mechanical Engineering
MallaReddy Engineering College (A),Secunderabad,Telangana-500100
[*]*Corresponding author:* [1]vajhula.rohithi96@gmail.com

Abstract: Mounting Tray is a interface between the unit and the aircraft structure (i.e. Avionics bay/ racking system) .It is usually made of thin aluminum alloy sheet, reinforced with stainless steel brackets. The structure is assembled with riveted joints in two stages i.e. sub assembly and final assembly. The main purpose of the mounting tray is to install the LRU in Aircraft, reduce and control the vibration and shocks that are transmitted to the Avionics equipment. It is designed with or without isolators, depending on vibration and shock levels. The sufficiency of the fixity of mounting tray will also be studied from vibration point of view in the following analysis. In this project the Design and Strength of vibration isolation of isolator mount avionics mounting tray has been investigated. Much effort has been focused on determining the mode shapes, Sway Space and damping produced with respect to the vibration mount positions. Determine no of isolators optimum location for isolators for a given load for Sine on Random vibrations inputs. Determined the sway space required and von-mises stresses at load points and desired locations to find out the factor of safety.

Keywords: **LRU in aircraft, Random Vibrations, Sway Spaces**

1.INTRODUCTION

Avionics appliances are exposed to different forms of vibration with variety of acceleration pitch and frequency limits. At some point of electronic equipment's life it may be subjected to some type of vibration at some point of time. Vibrations encountered by an LRU in Aircraft during flight, combat, manueover...etc produce many different types of failures in electronic equipment unless the proper consideration is given to the mechanical design of the electronic structure and its mounting racks. The vibration recurrence scale for airliners will differ with respect to 3 Hz too about 2000 Hertz, with increment amount which will vary with respect to 1G to about 7G peaks.

At the frequency range of 100-400 Hz in the vertical direction the highest acceleration occurs. Here we actually study about the sensitive and dynamic characteristics of the structures for enough stiffness and high intensity. By using different types of materials (metals) for the dampers or isolators we can reduce the structural vibration in the equipment. [1-4]

Here we study about the tuned mass dampers (TMD) is used for reducing the damping effects on the electronic equipment. Passive damping is most important method was we use single TMD with multiple degrees of freedom. The natural frequency of tuned dampers should match the natural frequency of the equipment. We also assume the weights of the brackets from the previous section and the weights are varied as per requirements and from the 2D design we create 3D drawing through which we can create a new model with new material for the analysis purpose were we can analyze the stresses developed in the model for withstanding the load. [5-8]

The study about the connecting elements of the structures for the aluminum alloys is studied in this paper. Aluminum alloy is the only metal which can be molded into any shapes and sizes as per the required design with very less cost. We use different types of mechanical fasteners for connecting the structures. In this paper we study about the bolt or rivet failure, progressive bearing distress of material adjacent to fasteners, net-section tensile failure, tear out of fasteners, above studied are some of the criteria's considered in this paper. [9]

The FEA plays an important role in the selection of the structure, metal, and design improvements of the structure. Here the vibration and stresses are directly carried out to the engine bracket. So through FEA analysis we can study the natural frequency, maximum equivalent stress analysis and deformation of the structure.

The main reason for the failure of the structure is the vibration and loading on the engine bracket due to which structure may be failed. We consider the structural characteristics and dynamic behavior. From this we can change the material properties and weight of the structure for better performance with a robust design. [9-11]

The corrosion of the metal which is used for preparation of the structure is the most regular problem observed in the structures. For modeling purpose we use CATIA software and for analysis we use ANSYS software. Normally we use cast iron for the preparation of the structure but due to the corrosive nature of the metal we use aluminum or glass fiber. For different applications the thickness is improved and for three different metals the results were obtained.

Compared to cast iron, aluminum metal shows good results with thickness of 3mm. But comparatively glass fiber is the best compared between three of them. [12-15]

Here we consider the accurate modeling of non-linear effects on the static behavior of the isolator. Improvement in the dynamic behavior of mount. [16]

2 .1 Material and Methods

2.1.1 Design and CAD Modelling

All parts of the mounting i.e tray, base plate, front bracket, rear bracket, front hook, sliding strip, guide pins, isolators, front hold downs are designed and modeled in Solid Works 2014.

The capability of generation of CNC code makes it more popular. Therefore lot of time incurred in programming reduced, which has direct impact on cost. It has also analysis capabilities in structural and thermal environments.

SOLID WORKS 2014 is a versatile 3D modeling and 2D drafting software used for design, modeling, and drafting of simple and complicated engineering parts. It is capable of producing geometry and visualizes the true replica of the model.

It generates parts, assemblies, welding, and sheet metal parts. It is used for design checks such as misalignment, interferences between mating parts and assemblies.

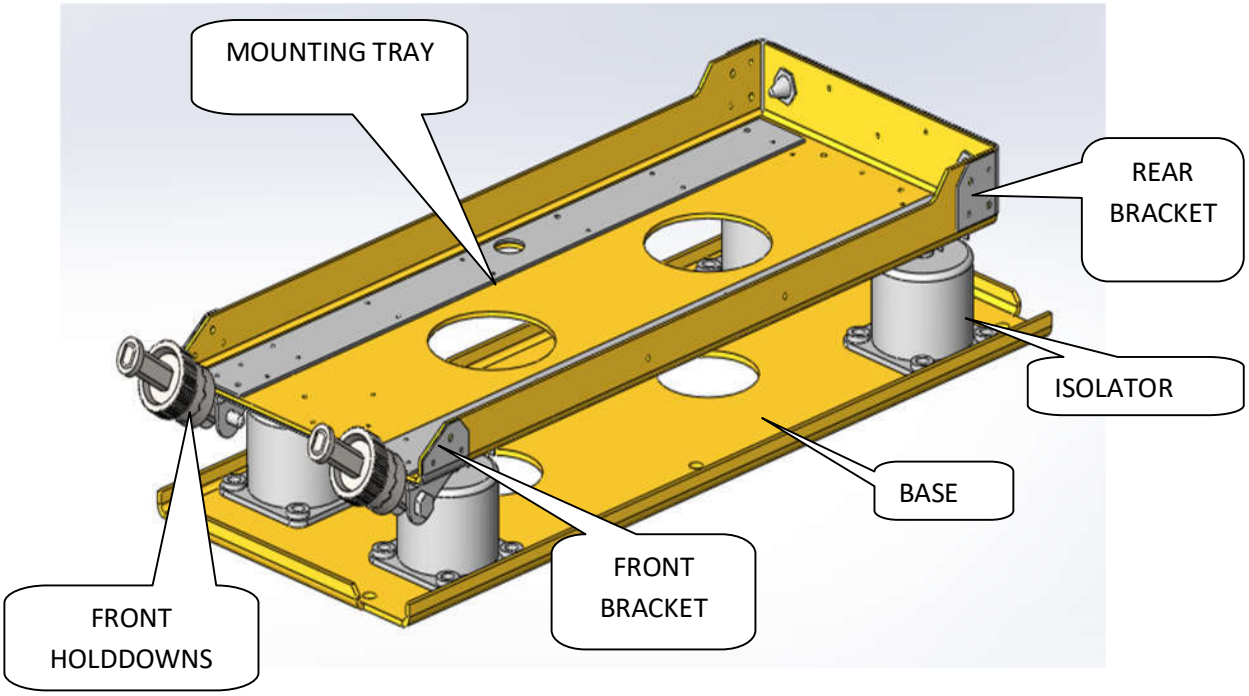

Fig.2.1 Mounting Tray Setup with its Parts

2.1.2 GEOMETRIC MODELING OF MOUNTING TRAY WITH DIFFERENT ISOLATOR POSITIONS

The design iterations of mounting tray are made with variation of positions and number of Isolators.

TRAY ASSEMBLY CONFIGURATIONS		
SL. NO.	DESCRIPTION	NO. OF ISOLATORS
CONFIG.01	TRAY ASSEMBLY-1	8
CONFIG.02	TRAY ASSEMBLY-2	6
CONFIG.03	TRAY ASSEMBLY-3	4

Table:-2.1 Tray assembly configurations

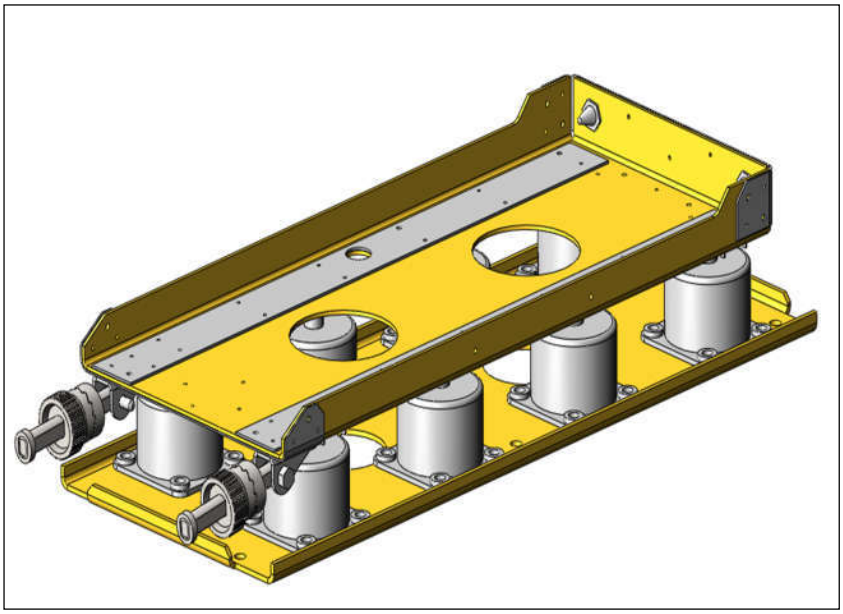

Fig.2.3 Configuration-1 : Tray assembly with 8 Shock Mounts

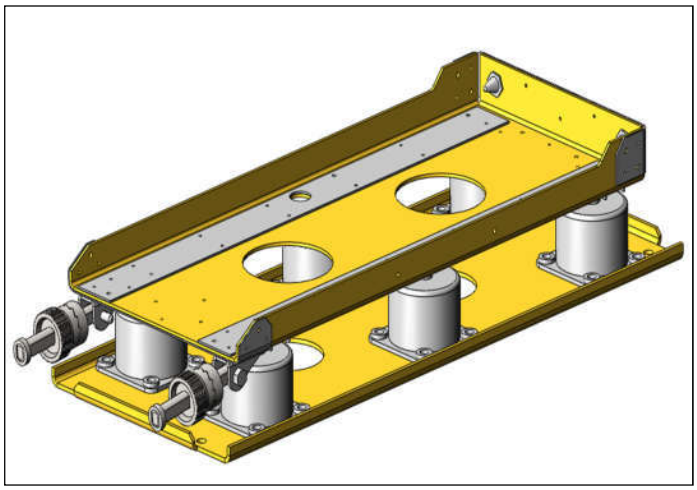

Fig.2.4 Configuration-2 : Tray assembly with 6 Shock Mounts

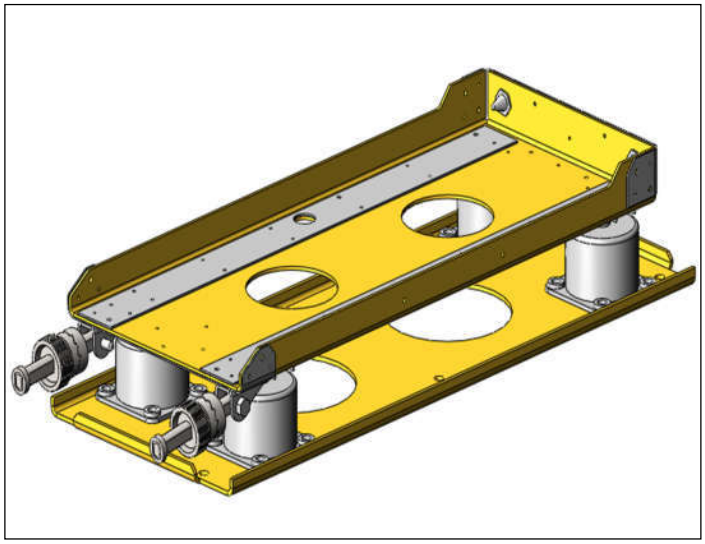

Fig.2.5 Configuration-3 : Tray assembly with 4 Shock Mounts

2.1.3 PREPARATION OF MODEL FOR FE ANALYSIS

The models generated by 3d cad modelling are not suitable for element generation because model contain large number of fixing holes, curvatures or fillets. Fixing holes and fillets are usually small in dimensions; these causes heavy distortion and aspect ratio during element generation or meshing.

So the model is refined to suit to generation of good quality of mesh.

Modified model does not contain small holes and fillets

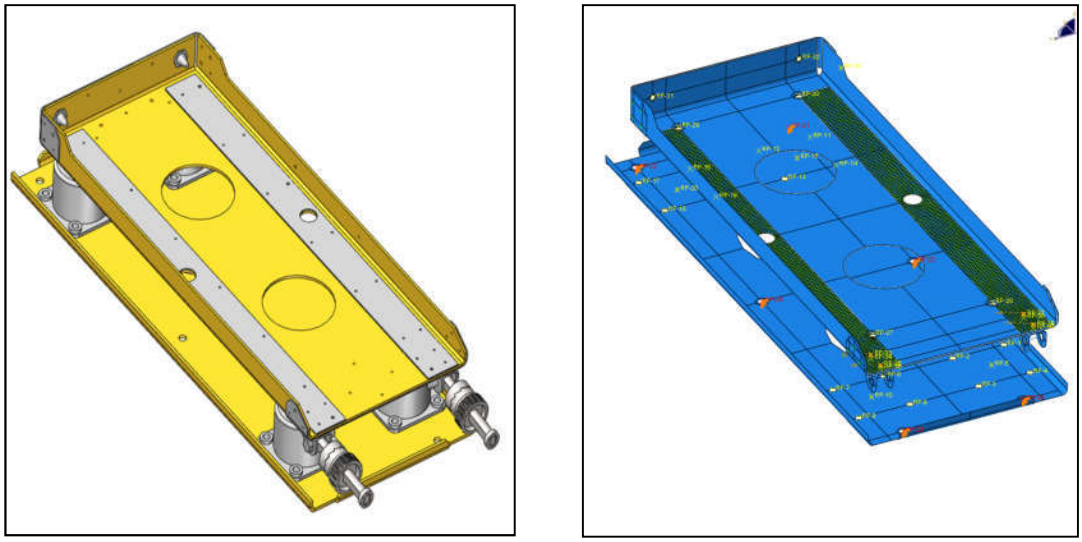

Fig. 2.6 Modified model of mounting tray for analysis

2.1.4 IMPORT/EXPORT OF MODEL

Before exporting the model, it has to be converted in such a way that the analysis software ABAQUS can easily understand. Therefore the model is converted to STEP format file in SOLID WORKS 2014 which is further imported to the FEA solver and viewed in its graphics area. The ABAQUS generates input file (*.inp) for FE modelling and solution.

2.1.5 ELEMENT GENERATION

The model thus imported is checked for correction in dimensions, any gaps between surfaces boundary continuity connections etc. model corrected if any above said problems appear.

Meshing is defined as the descritization of the whole solid into small elements. The junction of different meshing lines is called a node and the area of formed between a set of nodes is called an element.

Meshing helps us in accessing any part of the solid just by indicating the node number. Thus any part of the solid is easily accessible and it is easy for analysis.

Meshing is of two types namely 2D quad elements fot thin sheets and 1D beam elements for hold downs, pins and suitable elements depending on the element property. To mesh the parts we have to specify the type of meshing, size of the smallest element, size of the biggest element, and maximum element on small feature.

Elements are generated for all configurations using partitions and manual meshing. A first order 2D and 1D elements are chosen for tray parts and 1D quadratic element is chosen for hold down elements, spring element for shock mounts and mass element for CG of the unit.

ELEMENTS & NODES				
SL. NO.	DESCRIPTION	NO. OF ISOLATORS	NUMBER ELEMENTS	NO. OF NODES
CONFIG.01	TRAY ASSEMBLY-1	8	34500	32966
CONFIG.02	TRAY ASSEMBLY-2	6	34146	32570
CONFIG.03	TRAY ASSEMBLY-3	4	31725	30229

Table:-2.2 Representation of Elements & Nodes

All elements are checked for quality, node connectivity and perform boundary check.

The surfaces where loads applied are meshed and merged carefully with surrounding nodes of elements. Care has also been taken to merge nodes between tray and brackets...etc interface to ensure the connectivity between them as if they are in physical contact.

2.1.6 Abaqus Solution

The loads and boundary conditions are applied all configurations and a solution run in ABAQUS solver.

The problem was solved in two steps

1. Modal analysis to know the Eigen values (Natural Frequencies) and Eigen vectors (Mode Shapes)

2. Vibration analysis (mode based super position type)

ABAQUS generates and generates *.DAT and *.ODB output file after solution for post processing.

2.1.7 Vibration analysis:

- This analysis is run as a mode superposition linear dynamic analysis with base excitation. Solver settings are as shown below
- The natural frequencies which are extracted in the previous step are used for this analysis

- Damping chosen is modal damping with values chosen accordingly. Modes which are related to isolators are defined with damping value mentioned in isolator datasheets. For other modes, damping was chosen based on the empirical relations found in the literature ("Vibration analysis for electronic equipment", Dave.S.Steinberg, Third edition, Chapter 14, paragraph 14.18, p.368) as shown below.

  Transmissibility (Q) = A * $(f_n / (G_{in})^{0.6})^{0.76}$

  A=1.0 for beam type structures

- The output of this kind of analyses is RMS values of the stresses which account for one sigma value where the chance of occurring this is for 68.4% of the time. However, 3Sigma values are presented in the tabular format where the chance occurring this is for 99.6 % of the time.

3.1 RESULTS & DISCUSSION:

3.1.1 Mode shapes of mounting tray with 8 shock mounts

Here we study about the modes shapes of the mounting tray with 8 shock mounts. Were we have to take 10 Iterations with different frequency range as per required in the aircraft were the initial frequency is 17.9 Hz and the maximum frequency is 500.4 Hz.

We only represent two iterations because the frequency of the aircraft is always high so these two iterations are more compared to the other eight iterations.

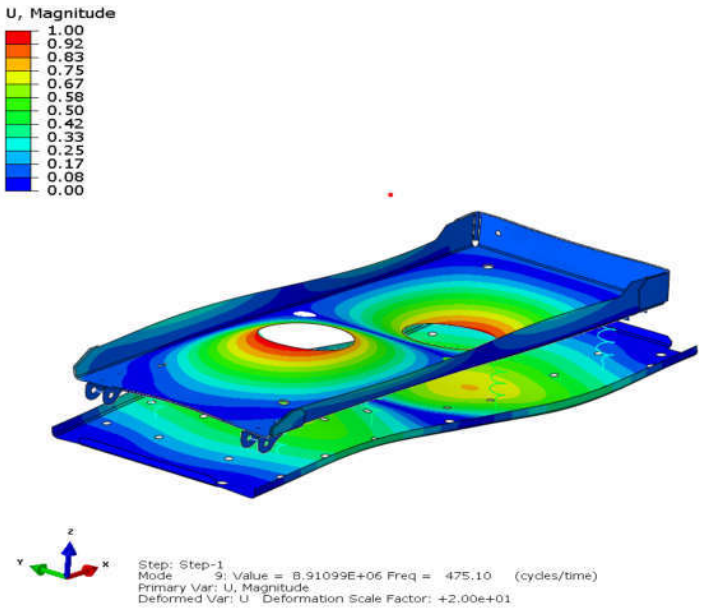

Mode:- 1

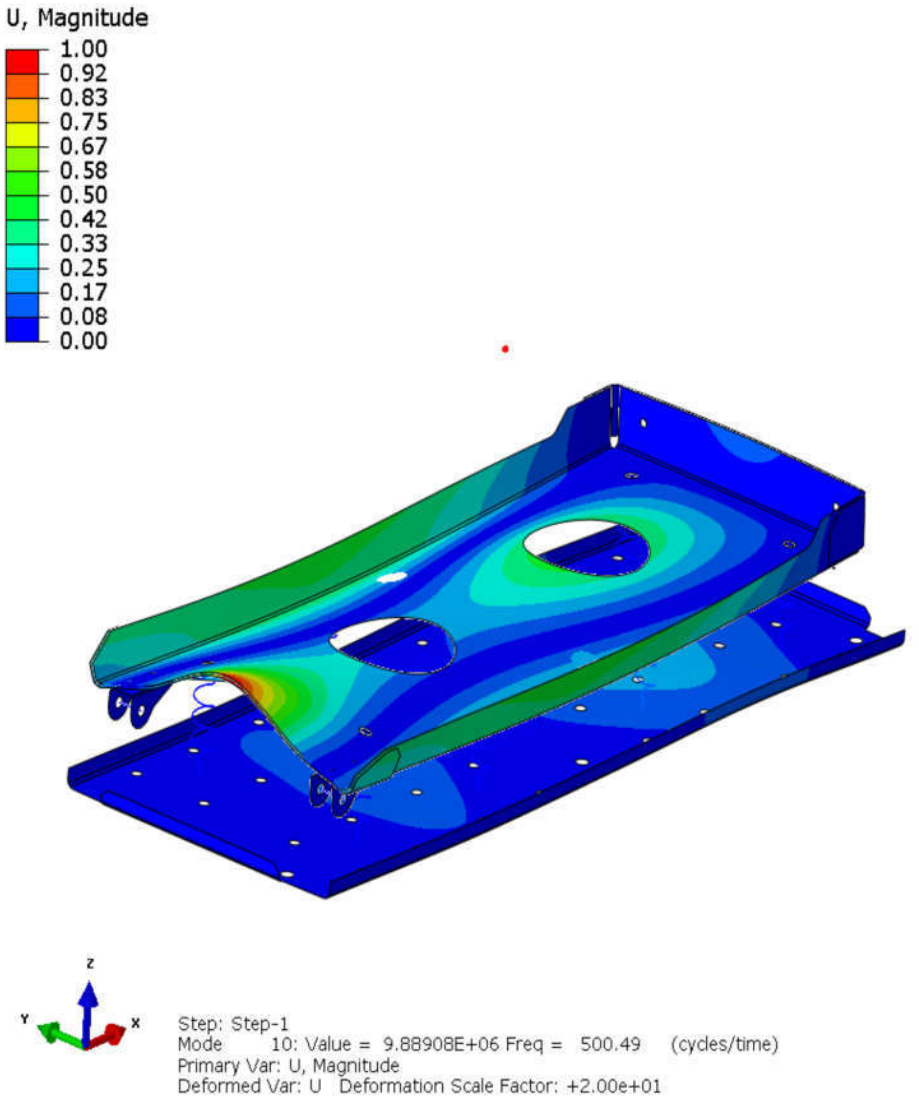

Mode:- 2

Fig.3.1 Mode Shapes with 8 Isolators

Table:-2.3 Mode Shapes and Frequency of Mode 1 & 2.

Mode No.	1	2
Frequency, Hz	475.1	500.4

3.1.2 Mode shapes of mounting tray with 6 shock mounts

Here we study about the modes shapes of the mounting tray with 6 shock mounts. Were we have to take 10 Iterations with different frequency range as per required in the aircraft were the initial frequency is 19.3 Hz and the maximum frequency is 484.8 Hz.

We only represent two iterations because the frequency of the aircraft is always high so these two iterations are more compared to the other eight iterations.

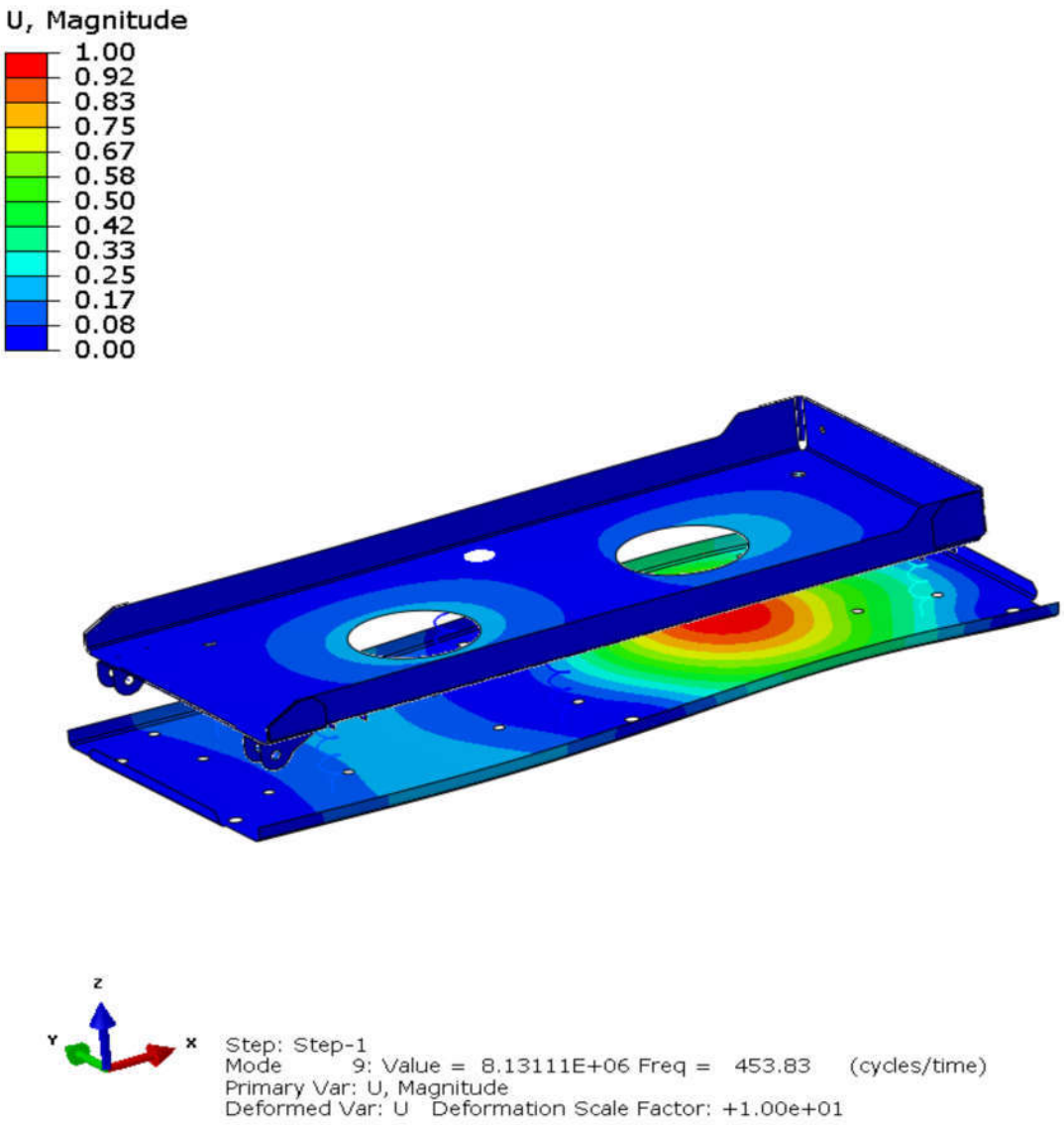

Mode:- 1

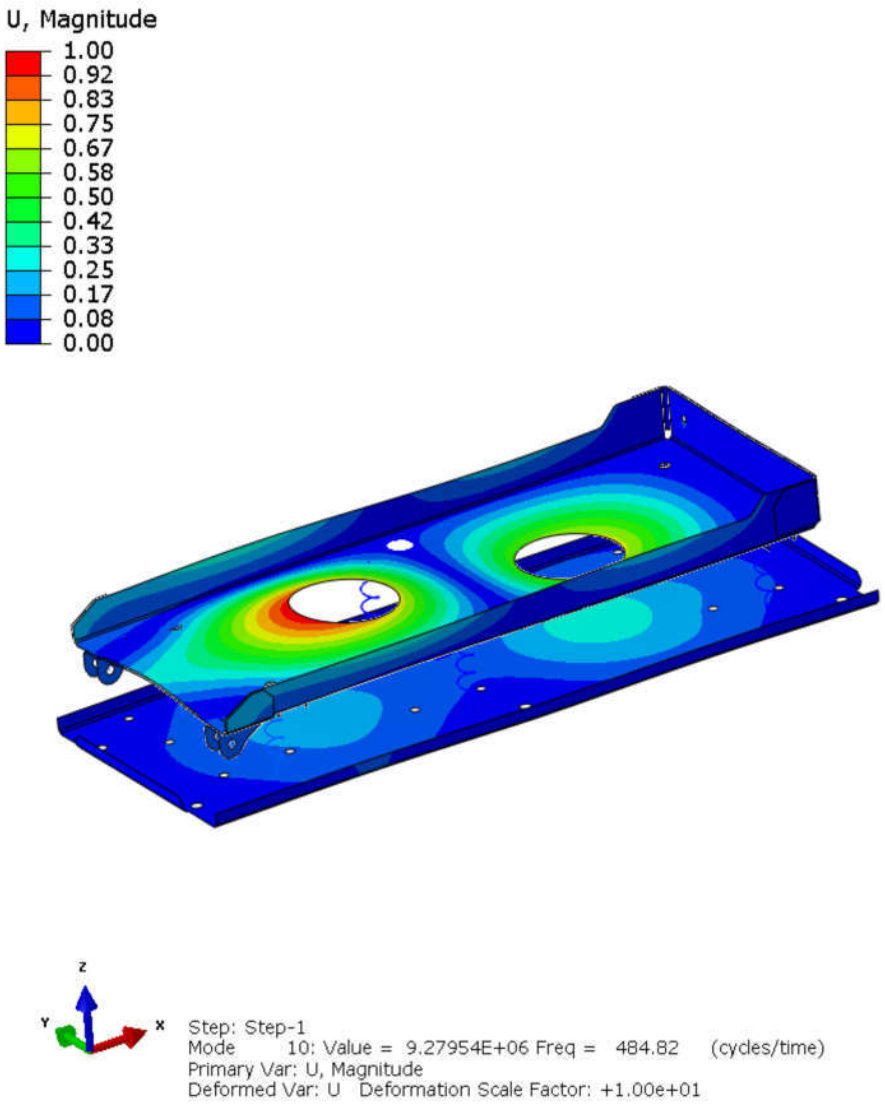

Mode:- 2

Fig.3.2 Mode Shapes with 6 Isolators

Table:-2.4 Mode Shapes and Frequency of Mode 1 & 2.

Mode No.	1	2
Frequency, Hz	453.8	484.8

3.1.3 Mode shapes of mounting tray with 4 shock mounts

Here we study about the modes shapes of the mounting tray with 4 shock mounts. Were we have to take 10 Iterations with different frequency range as per required in the aircraft were the initial frequency is 15.4 Hz and the maximum frequency is 500.1 Hz.

We only represent two iterations because the frequency of the aircraft is always high so these two iterations is more compared to the other eight iterations.

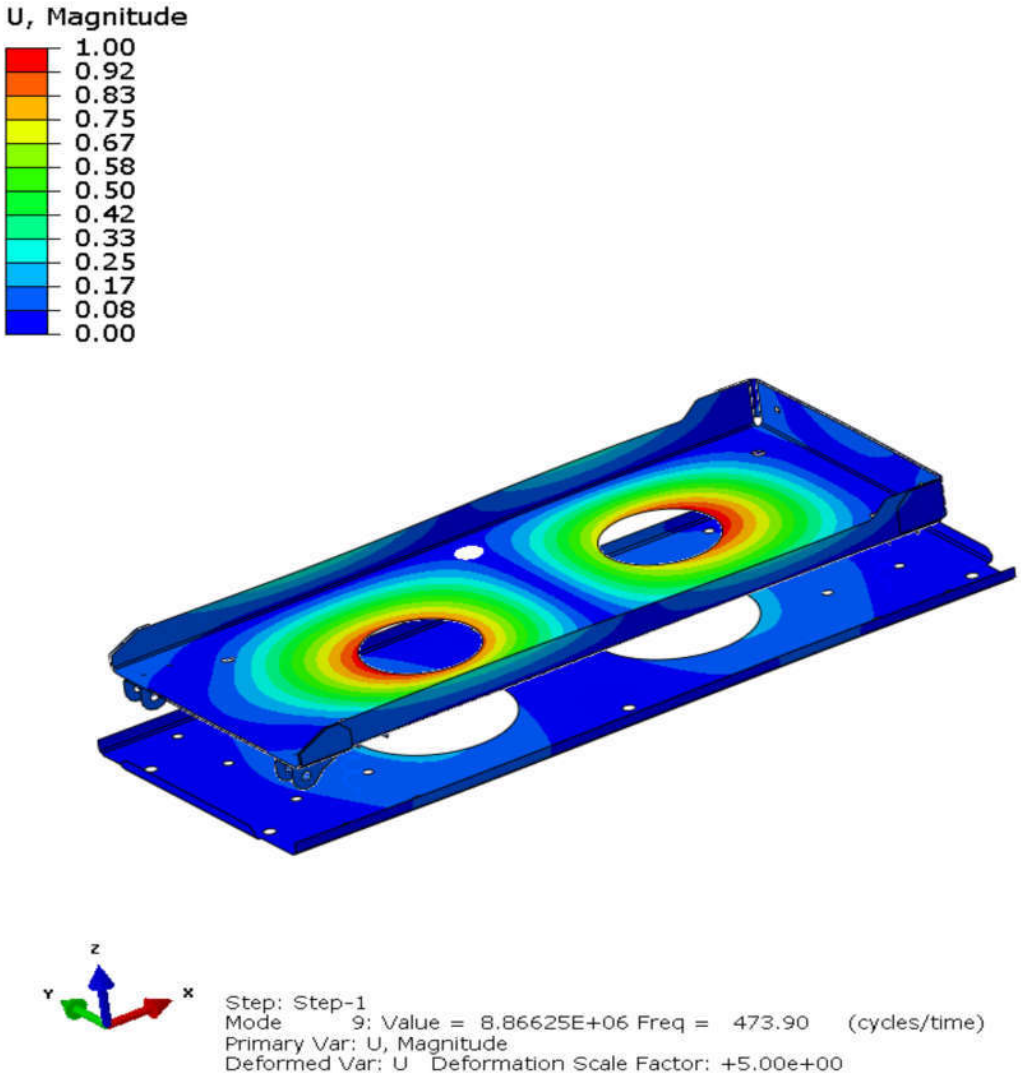

Mode:- 1

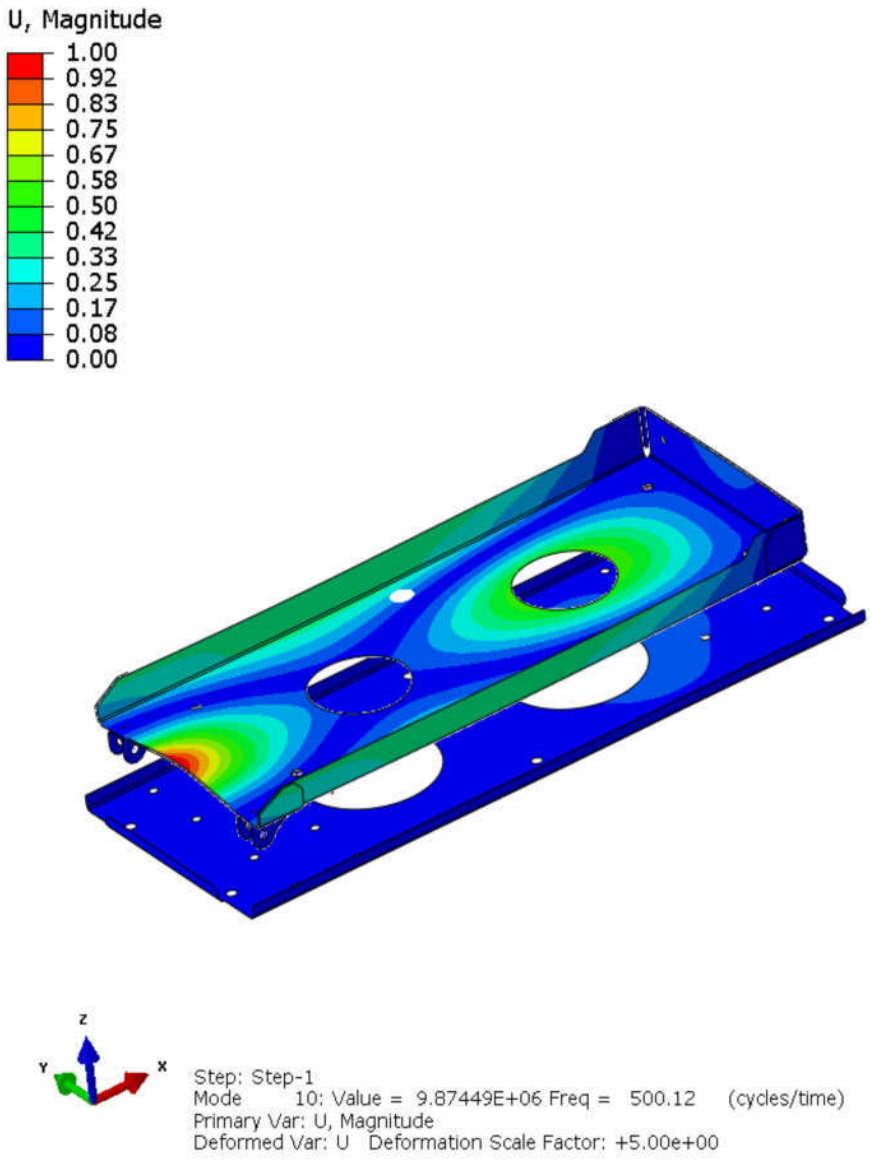

Mode:- 2

Fig.3.3 Mode Shapes with 4 Isolators

Table:-2.5 Mode Shapes and Frequency of Mode 1 & 2.

Mode No.	1	2
Frequency, Hz	473.9	500.1

Stress results - Von-Mises Criterion

Analysis was done for all three iterations & stress plots are shown for Iteration -3 i.e Mounting tray with 4 shock mounts as it gives minimum sway space i.e 4.5mm in Y- direction.

Iteration-1 : Mounting tray with 4 Shock mounts

(X-Direction)

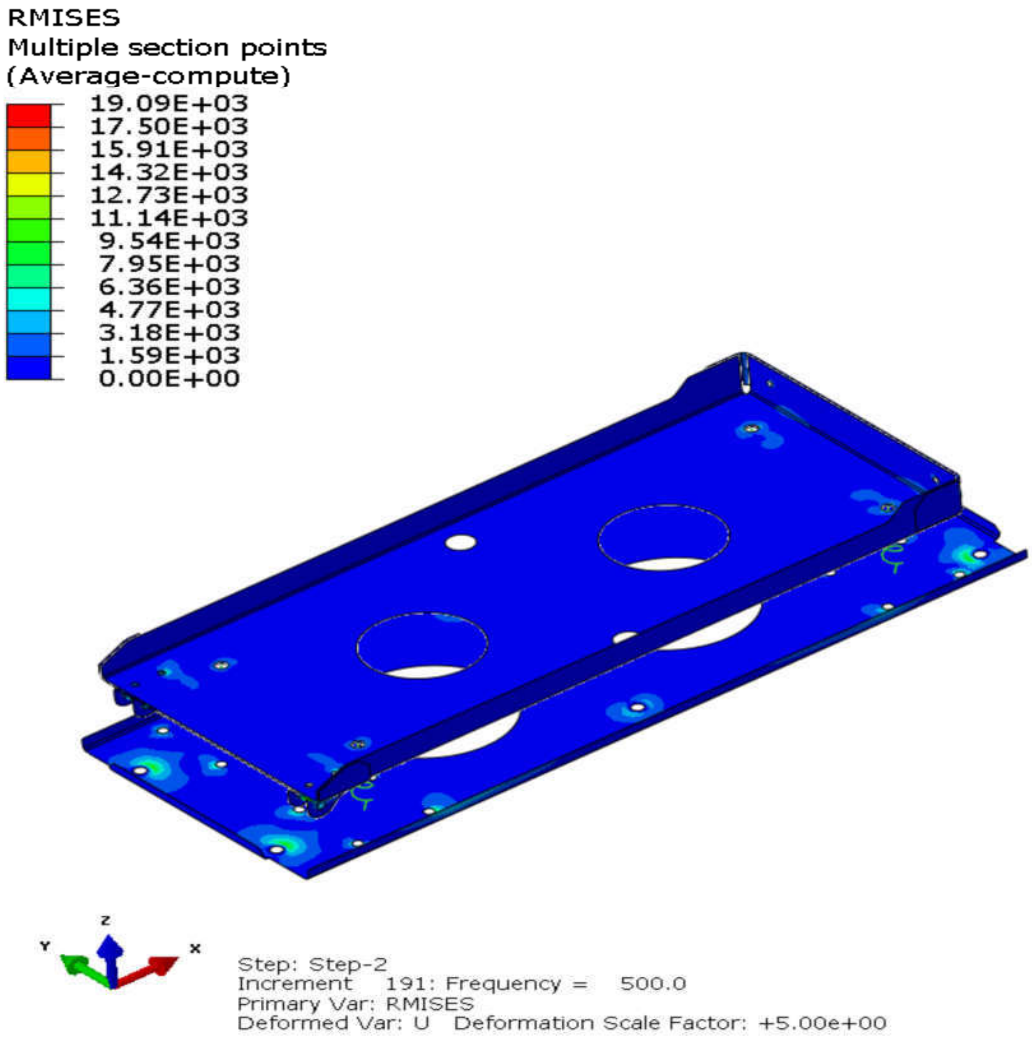

Fig.3.4: RMISES stress distribution of the Mounting Tray Assembly in X-direction

Iteration-2 : Mounting tray with 4 Shock mounts

Y-Direction

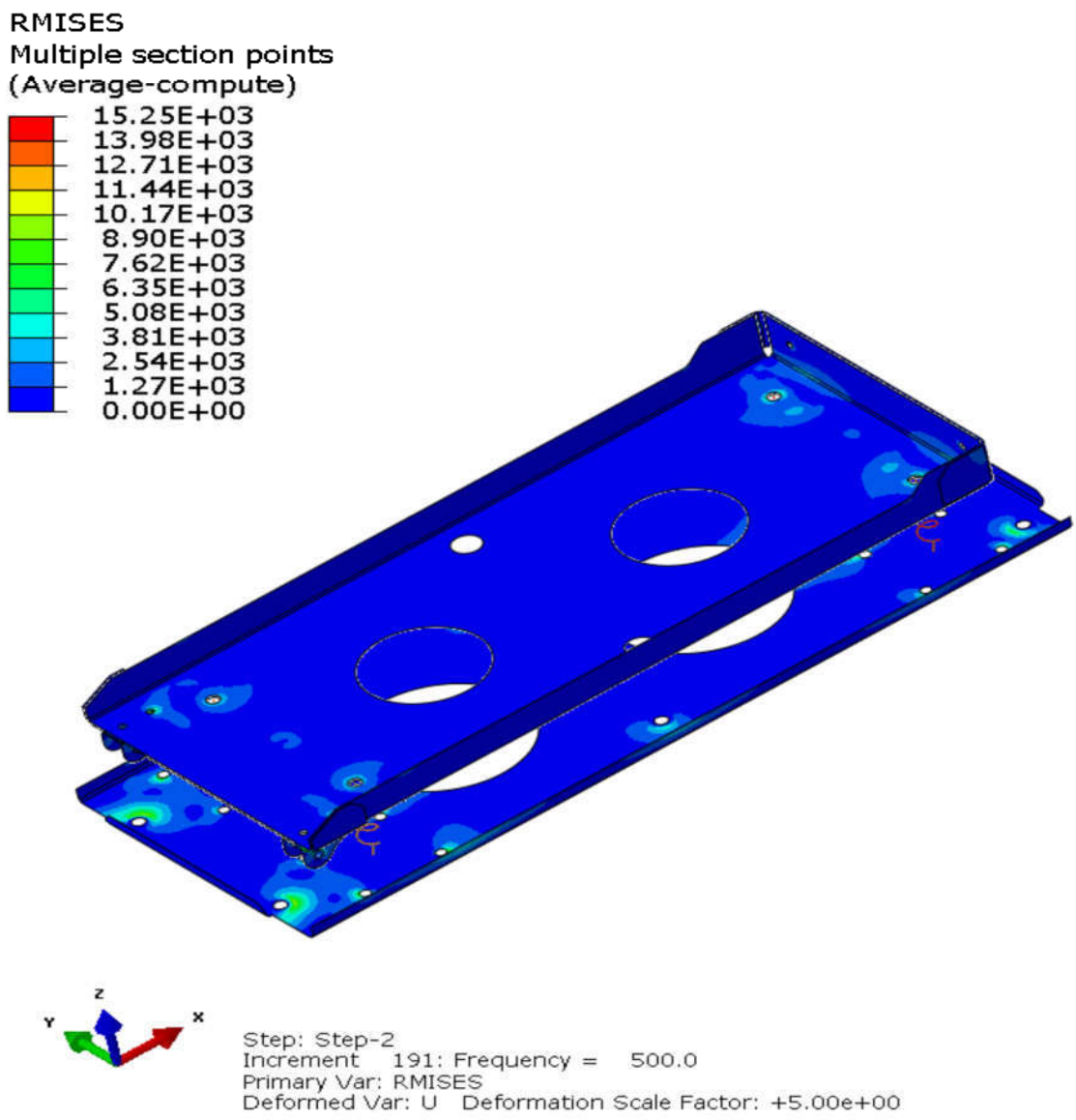

Fig.3.5: RMISES stress distribution of the Mounting Tray Assembly in Y-direction

Iteration-3 : Mounting tray with 4 Shock mounts

(Z-Direction)

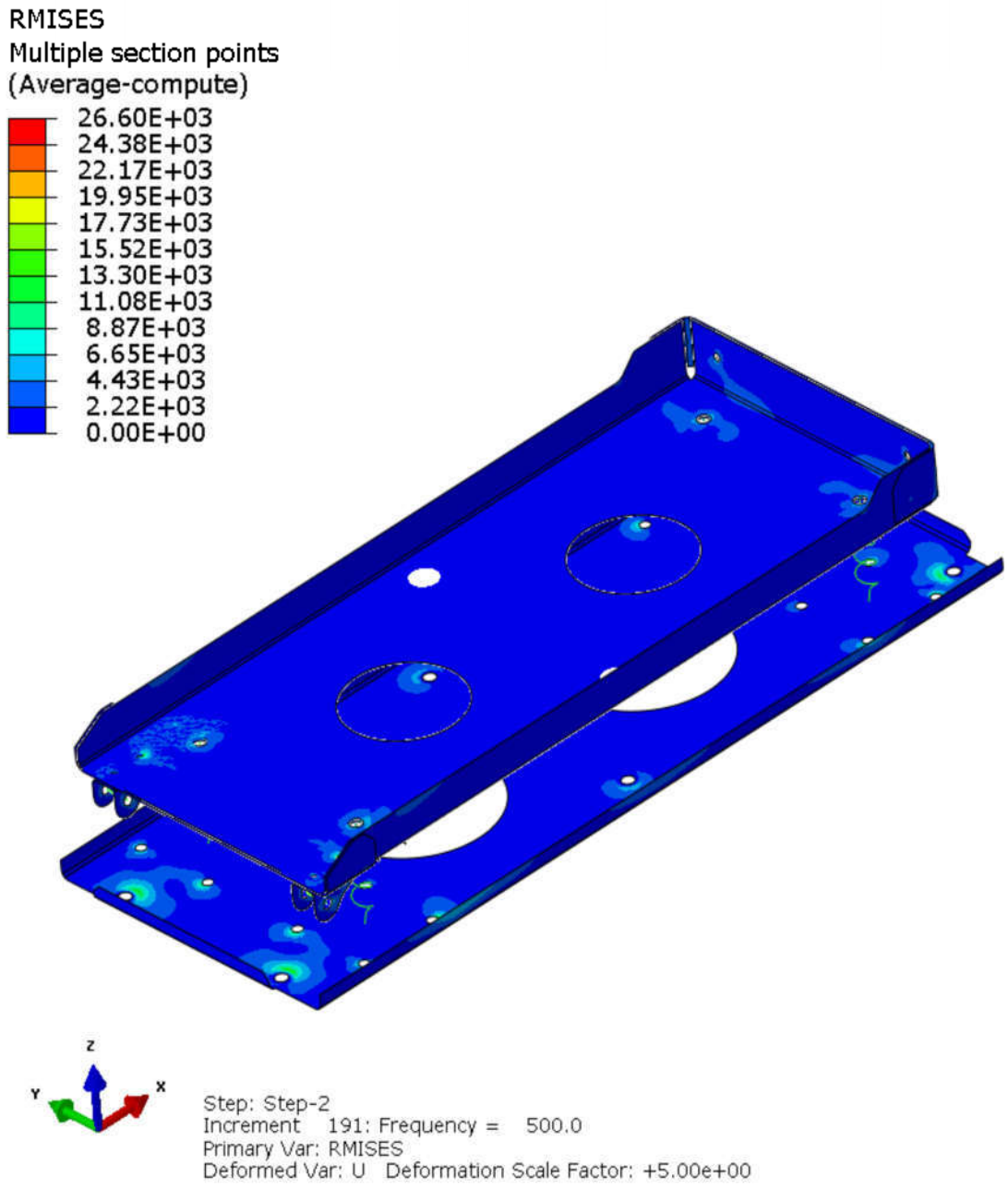

Fig.3.6: RMISES stress distribution of the Mounting Tray Assembly in Z-direction

Table:-2.6 Stress results in X,Y,Z Direction

SL NO	PART NAME	VON-MISES STRESS (1σ VALUE)		VON-MISES STRESS (3σ VALUE) In Mpa	YIELD STRENGTH (Mpa)
		Kg / mm. sec^2	Mpa		
1	Mounting Tray in X- Direction	7.13×10^3	7.13	21.39	175
2	Mounting Tray in Y- Direction	6.60×10^3	6.60	19.8	175
4	Mounting Tray in Z- Direction	7.73×10^3	7.73	23.19	175

Sway space:

Sway space of LRU is calculated by determining the maximum displacement of CG of the unit displaced during vibration time, which is given as follows for Y- Direction (Transverse direction). The maximum sway (S) of LRU was calculated by simple lever rule and tabulated below

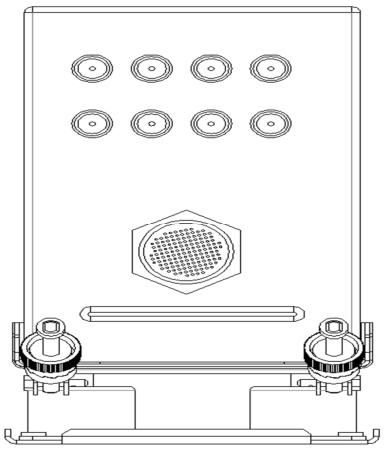

Fig.3.7: Without Sway

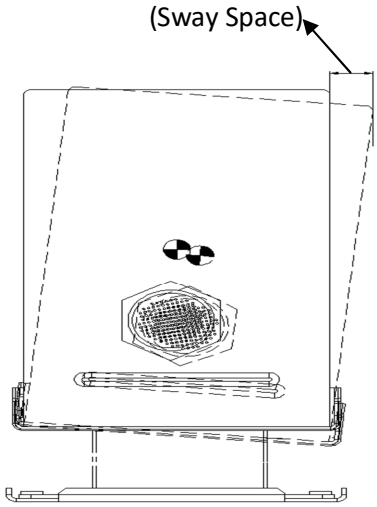

Fig.3.8: With Sway during Vibration

Table:-2.7 Displacement and Sway of LRU in Y- Direction

Sl. No.	Iteration	Displacement at C.G in y-dir in mm (3 Sigma Value)	Sway of LRU in y-dir in mm	Remarks
1	Iteration 1 (8 shock mounts)	7.05	21.15	--
2	Iteration 2 (6 shock mounts)	20.19	60.57	Higher displacement due to natural frequency close to rotor frequency
3	Iteration 3 (4 shock mounts)	1.5	4.5	--

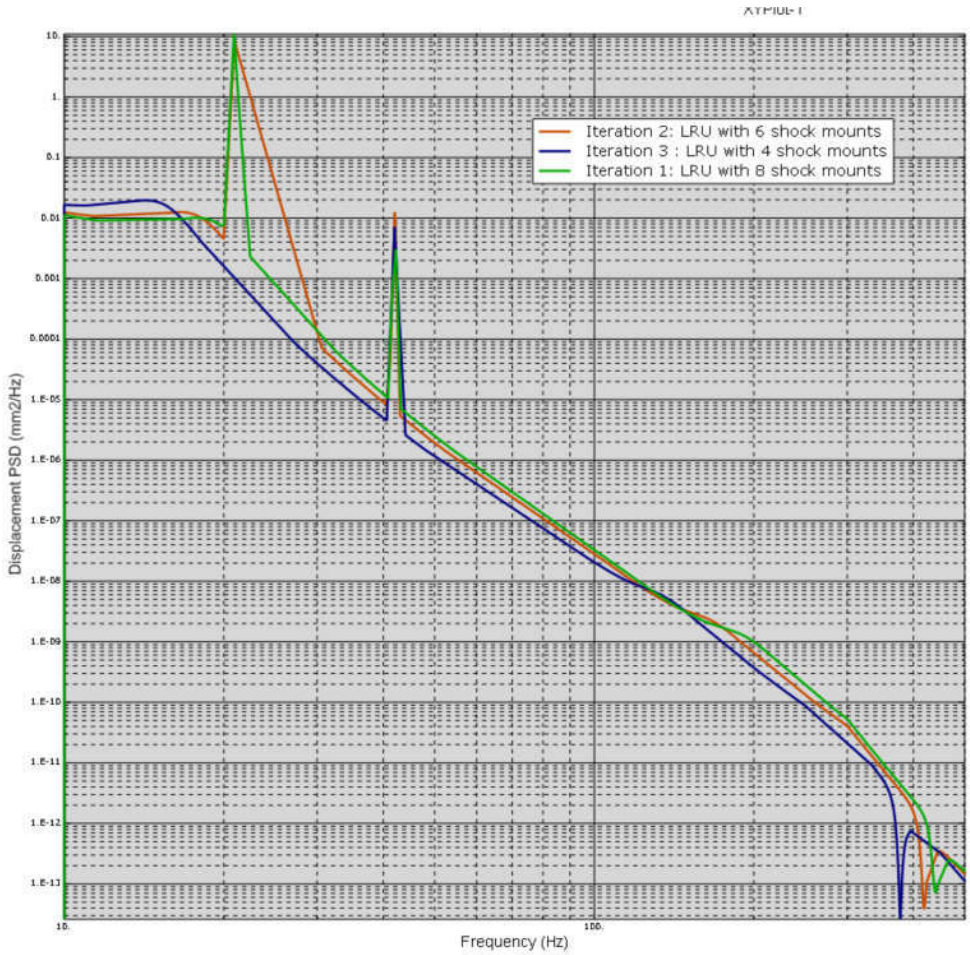

Fig.3.9: Displacement of CG Vs Frequency

CONCLUSIONS

- Mounting tray assembly of configuration 3 was selected based on sway space and stresses induced in the mounting tray parts.
- Stress results in all directions for vibration found to be well below the yield strength.
- It can also be concluded from the stress and displacement results that the mounting tray can withstand Platform Vibration loads (Sine on Random vibration) with a safety factor of 2.63.

REFERENCES

1. *"Analysis and Optimum Design for Inertial Navigation Platform Frame Structure", Yingwu Huang & Yan Cui, Beijing Institute of Technology, Beijing, China.* ***(2012)*** *978-1-4673-0199-2/12*
2. *"Finite Element Analysis of GPS primarly Based Vehicle Tracking System with Enclosure for Dynamic Assessment", Dept. of E and TC, Pad.Dr.D.Y.Patil Institute of Engineering and Technology, Pune, India.****(2012)*** *978-1-4577-2078-9/12*
3. *"Damper's Application analysis in Structural Vibration Control", Shaanix Institute of Design & Architecture Science, School of Civil Engineering, Xi'an University of Architecture & Science, China.* ***(2010)*** *978-0-7695-4026-9/10*
4. *"Active Vibration Absorption of Multi-Frequency Harmonic Forces on Mass-Spring-Damper Systems", F.Beltran-Carbajal, G.Silva-Navarro, B.Vazquez-Gonzalez, Department of Electrical Engineering, Section de Mecatronica, Mexico.* ***(2003)***
5. *"Optimization of multiple tuned mass dampers to suppress machine tool chatter", School of Mechanical Engineering and Automation, Beihang University, Beijing 100191, China, Department of Mechanical Engineering, Ideko-Danobat Group, Elgoibar 20870, Spain, Manufacturing Automation Laboratory,*
   Department of Mechanical Engineering, The University of British Columbia, 2054-6250 Applied Science Lane, Vancouver, BC, Canada V6T1Z4. ***(2010)*** *834-842*
6. *"Analysis of Cabin Mounting Bracket of Truck Using ANSYS", Department of Mechanical Engineering, J B Institute Of Engineering &Technology, Hyderabad, Telangana State, India 3Departmentof Mechanical Engineering, Chaitanya Bharathi Institute Of Technology, Hyderabad, Telangana State, India.* ***(2016)*** *2319 - 6734*

7. *"Design Criteria for Bolted Connection Elements in Aluminum Alloy 6061", Department of Civil Engineering, The University of Akron, Ohio 44325, C.C Menzemer, L. Fei, T.S Srivatsan.* ***(1999)****Vol. 121*
8. *"Design and Analysis of Engine Mount Bracket for Go-Kart", Jain Ankit Nitin, Patil Prathamesh Pravin, Shet Giten, Mailareppa Marachakkanavar, Sinhgad Institute of Technology and science, Narhe Pune Maharashtra -411041, India.****(2019)***
9. *"Analysis of Radiator Mounting Bracket Design and Derivation of Transfer Function to Predict Modal Frequencies Based on Parametric Study", Pooja More, B Santhosh, Amol Jain, Department of Mechanical Engineering, Amrita School of Engineering, Coimbatore, Amrita Vishwa Vidyapeetham, Amrita University, India.* ***(2018)*** *23945 - 23954*
10. *"Design and Optimization of Car Battery Tray", Mrs. Jostna Ingale, Prof. A. B. Dighewar M.E. Schlor, (CAD/CAM), Assistant Professor Department of Mechanical Engineering,*
    Babasaheb Naik College of Engineering, Pusad. ***(2017)*** *E- ISSN: 2321 - 9637*
11. *"Design Analysis of Mounting Bracket for Steering Gearbox", Dattatray S. Patil, Prof. PushkarajD. Sonawane, Department of Mechanical Engineering, Maharashtra Institute of Technology, SavitribaiPhule Pune University, Pune, Maharashtra, India.* ***(2016)*** *119-125*
12. *"Analysis of Engine Mounting Bracket for an Automobile using FEA", Akshay Kumar and Gagandeep Singh Mavi, Department of Mechanical Engineering, Chandigarh University, Gharuan - 140413, Punjab, India.* ***(2018)*** *11128/130778*
13. *"Optimization of Front Axle Mounts Vibration Characteristics for Driveline Integration with Chasis", Vasudeva Rao S, Lead Engineer and Soundararajan. S, Engineering Manager, Vehicle Engineering Division, Chassis SMT, Creator Building, ITPB, Whitefield Road, Bangalore, India.* ***(2012)***
14. *"Design and Analysis of Anti-vibration mount for G+3 Elevator", Patel Sanket Bharat, Shivprakash B Barve, Sandeep G Thorat and Samata S Mujumdar, Department of Mechanical Engineering, MAEER's MIT College of Engineering, Pune, India.* ***(2014)*** *ISSN 2277-4106*
15. *"Vibration Analysis of an Engine Mount", FERNANDO M. D. RAMOS, Departamento de Engenharia Mecânica, Instituto Superior Técnico, Universidade Técnica de Lisboa, Av. Rovisco Pais, 1049-001, Lisboa, Portugal.* ***(2009)***
16. *"Avionics Isolation Design Guidelines", By Tom Irvine.*

17. *"Lords Aerospace & Defense Isolator Catalog" Vibration, Shock & Motion Control Products For Sensitive Equipment, Shipping Containers & Aircraft Interiors.*
18. *"Barry Controls The Steady Force in Shock & Vibration Isolation" Engineered Solutions for Controlling Vibration, Shock & Noise.*
19. *"MIL-STD_810G Department of Defense Test Method Standard" Environmental Engineering issues & Considerations and Laboratory Tests.*
20. *"Arinc Specification 600-19" Air Transport Avionics Equipment Interfaces.*
21. *"Arinc Specification 404-A" Air Transport Avionics Equipment Interfaces.*