A REVIEW ON CLOSED LOOP SPEED CONTROL AND TORQUE RIPPLE MINIMIZATION OF BLDC DRIVES USING HYSTERESIS CURRENT CONTROLLER

***Swati Minj[1], Shweta Chourasia[2]**
[1]M.Tech Scholar, [2]Assistant Professor
[1, 2] Department of Electrical Engineering
[1, 2] SRK University, Bhopal, Madhya Pradesh, India
*[1] Minj.21swati@gmail.com**

Abstract: *This research paper demonstrates basic essential and fundamental study of a closed-loop control scheme with Hysteresis Current Controller for BLDCM (Brushless DC Motor) drive scheme. In the current past, adjustable speed driving schemes have grown in several small scale and large scale applications alike domestic appliances, automobile industries etc. The usage of ecofriendly and green electronics are significantly developed to save energy consumption of several devices. This leads to perfection in BLDCM (Brushless DC Motor). The usage of BLDCM (Brushless DC Motor) augments numerous performance factors ranging from higher efficacy, higher torque in low-speed range, high power density, low repairs and less noise than other motors. The BLDCM (Brushless DC Motor) can act as a substitute for customary motors like switched reluctance motors and induction motors.*

Keywords: *BLDCM (Brushless DC Motor), PMBL (Permanent Magnet Brushless) motors, CSI (Current Source Inverter), VSI (Voltage Source Inverter).*

1. Introduction

BLDC (Brushless DC motor) motors necessitate more effectual activation for the reason that energy and price savings become a superior trepidation for designers. One way to confirm augmented effectiveness is to select the Hall-Effect sensor with accurate bi-polar latching for electronic switching of BLDC (Brushless DC motor) motors. These small unified circuits play a significant role in engine effectiveness, which can melodramatically influence the reliability and recital of numerous perilous applications, along with robotics, convertible medical tools and HV-AC fans. These applications all necessitate a very effectual and quiet engine. The BLDC (Brushless DC motor) motors are actual prevalent in a wide diversity of applications. PMBL (Permanent Magnet Brushless) motors can be exalted in a 3-phase synchronous motor class; they are fine driven by a DC-potential with Permanent Magnets (PM) resting on rotor; they substitute the mechanical switch and the brush mechanism. The switching is effectual appreciations to electronic switches, which hoard current to motor windings in synchronization with position of rotor. Here, the BLDC (Brushless DC motor) motor desires near-square current wave-forms, which are coordinated by back emf to make a constant output torque in 60 non-conductive areas and 120 conductive areas. Furthermore, at each instant, only 2-phases are conducting and other phase is in-active. The motor has smaller amount inertia, so informal to start and stop.

In the BLDC (Brushless DC motor) motors, magnetic field of rotor makes a rotating magnetic field, consenting BLDC (Brushless DC motor) motors to conquer a higher efficacy. The BLDC (Brushless DC motor) motor has a linear current torque and a speed-voltage

relationship identical to that of DC motor or machine. The BLDC (Brushless DC motor) motor has trapezoidal EMF and quasi-rectangular current wave-forms.

In the BLDC (Brushless DC motor) motor, torque-ripple is contingent on rear emf and current wave-forms, and their non-ideal belongings make a pulsed torque. The fall of torque-ripple is important from point of opinion of speed and position control. The site of rotor is noticed by a Hall Effect sensor or slit optical disk, if 3-square waves are phase shifted by 120 degree. These signals are decoded by combinational logic to deliver the trigger signals essential for 120 degree conduction on each of 3-phases.

The VSI (Voltage Source Inverter) control is only used for electronic commutation which depends on position of rotor signals of the PMBL (Permanent Magnet Brushless) DC motor. PMBL (Permanent Magnet Brushless) DC motors are archetypally powered by 3-phases CSI (Current Source Inverter) or a VSI (Voltage Source Inverter) controlled using the spot of rotor. These position sensors escalation the prices, dimensions and intricacy of control plummeting the reliability and adequacy of these drives.

The PMBL (Permanent Magnet Brushless) motor can be regarded as stated by the back EMF wave-form, someplace it can be used in BL-AC (Brushless AC) or brushed DC (BLDC) mode.

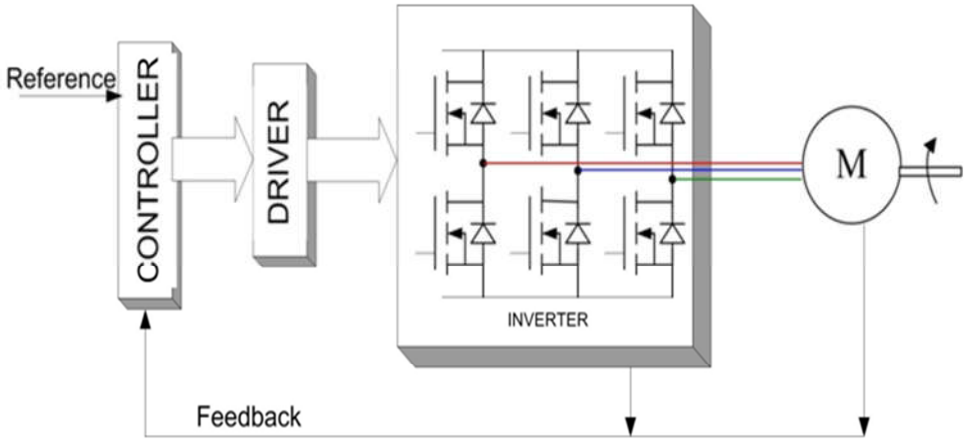

Figure 1 Block Diagram of BLDC

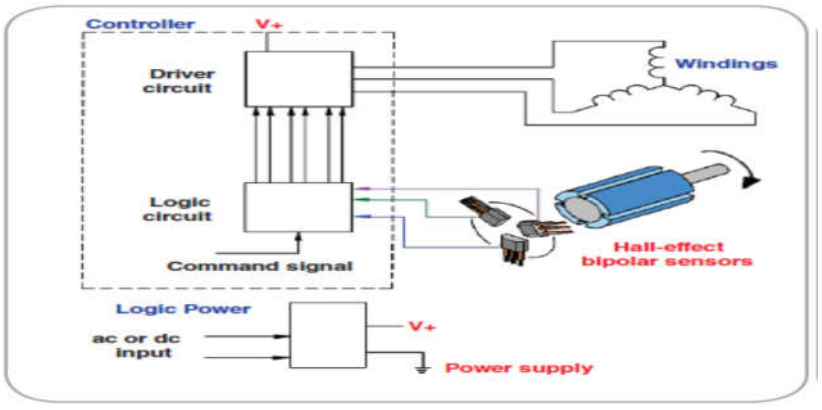

Figure 2 Block Diagram of BLDC

Usually the BLAC (Brushless AC) motors have a sinusoidal back EMF waveform and BLDC (Brushless DC motor) motors have a trapezoidal back emf. The PMBL (Permanent Magnet Brushless) DC motor can be used in common and low price applications.

BLDC (Brushless DC motor) motors usually have decent torque–speed explanation rapid dynamic response, high efficacy, long life, etc. BL-DC (Brushless DC motor) motors may be used in high-end white things (washing machines, dishwashers, etc.), high-end pumps, medical, electric traction, aircrafts, HV-AC industry, fans, aerospace equipment, domestic appliances, road vehicles, automobiles, military equipment, transportation, power tools, toys, vision and sound equipment and healthcare tools ranging from micro-watt to mega-watts, and other applications that require high efficacy and steadiness. The BLDC (Brushless DC motor) motors are potentially cleaner, quicker additional effectual, a compact amount of noisy plus more dependable. Progressive control procedures and ultra-fast processors have made PMBLDC (Permanent Magnet Brushless DC motor) motors apposite for position control in machine device robotics and high precision servos, speed control and torque control in a variety of industrial drives and process control applications, hard-disk drive, etc. HEVs (Hybrid electric vehicles) because of environmental anxieties of vehicular emissions. Relating BLDC (Brushless DC motor) motors with DC motors, DC motor have great starting torque capacity flat speed control and capability to control their flux and torque simply and self-sufficiently, consequently, progressively used in industrial automation, instrumentation, and numerous other equipment and servo applications. Permanent Magnet (PM) synchronous motors are extensively used in minor and medium power applications for example computer peripheral tools and automated industrial installations. In such applications, the motion controller may prerequisite to react comparatively quickly to control changes and to offer adequate resistance against the qualms of control system, Rashid (2004). The BL-DC (Brushless DC motor) motor is a novel multiplicity of DC-motor whose switching is done electronically in place of brushes. Consequently, it needs smaller amount maintenance and its sensitivity to noise is less noticeable to have a combined motor. For greatest recital of the rear engine, the emf must be free of ripples. An emf detection technique is consequently used to classify the rear emf of engine and to mend it, the requisite planning has been on condition that. The ZCD (Zero Crossing Detection) technique is used to perceive and mend the rear emf of engine. The pulses attained from ZCD (Zero-Crossing-Detection) can be used in perceiving position of rotor as a means of cultivating engine recital.

CPIC (Conventional PI Controller) is one of most common methods to speed control in industrial electrical drives on account of its ease and the clear association amid its parameters and the system's feedback stipulations. It is also base of numerous algorithms and superior control tactics. These secure gains can be altered to some, but not all, operating circumstances since the processes caught up are common difficulties, nonlinearities, time variations, and model qualms.

2. Brushless DC Machine

In year 1962, the most basic indication of a BLDC (Brushless DC motor) motor was bring into being when Trickey and Wilson transcribed on a BL-DC (Brushless DC motor) motor. It was later advanced as a high-torque, high-reaction drive for superior applications for instance tape and disk-drives for robotics, computers and positioning structures, along with in aircraft where wear and tear brushes was intolerable because of little humidity. This motor can't be used for industrial determinations for a power prerequisite superior than 5hp. Over the years, with presence of high energy magnetic materials, the potential and power of the transistors, e.g. thyristors and power MOSFETS (Metal Oxide Semiconductor Field Effect Transistor),

these engines have come shooting up to nourishment. In year 1980, the first BLDC (Brushless DC motor) thyristor motor was anticipated. The first large BL-DC (Brushless DC motor) motors, with a power output of 50hp or more, were designed by R.E. Lordo of Powertec Industrial Corporation in late year 1980s. The General block Diagram of Motor Driven BLDC (Brushless DC motor) shown in Fig. 3.

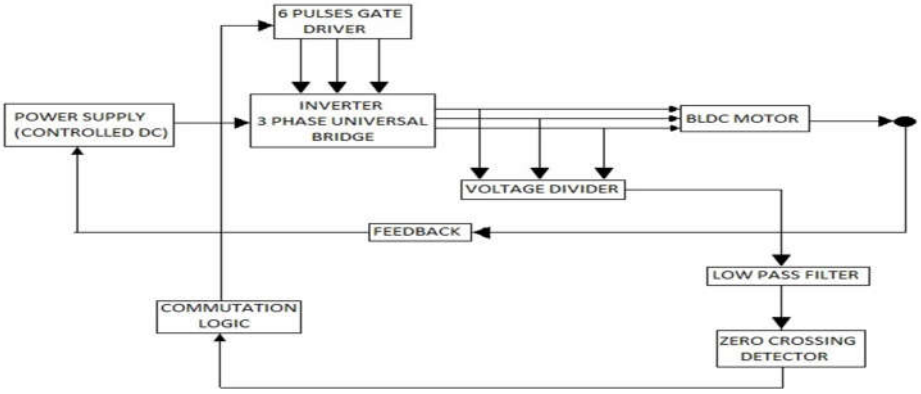

Figure 3 Overall General Block Diagram of the BLDC Motor Drive

At present, all major engine manufacturing industries produce BL-DC (Brushless DC motor) motors. BL-DC (Brushless DC motor) motors have an important influence on some industrial marketplaces, mostly plastics and winders, cranes, fibers, drawers and conveyors. As a common rule, a mining company newly put numerous of these engines at insignificant power ratings of 300hp, functioning coal conveyors in subversive mines. The growing popularity of BLPM (Brushless Permanent Magnet) motors in recent years is for the reason that of falling costs for high-power magnets and electronics. BLPM (Brushless Permanent Magnet motor) motors work well and perform well than electromagnetic machines. Figure 4 shows a PMBLDC (Permanent Magnet Brushless DC motor) motor. All parts are revealed in Figure 4. The Permanent Magnet (PM) is used for rotor; the sensors are realized as hall elements.

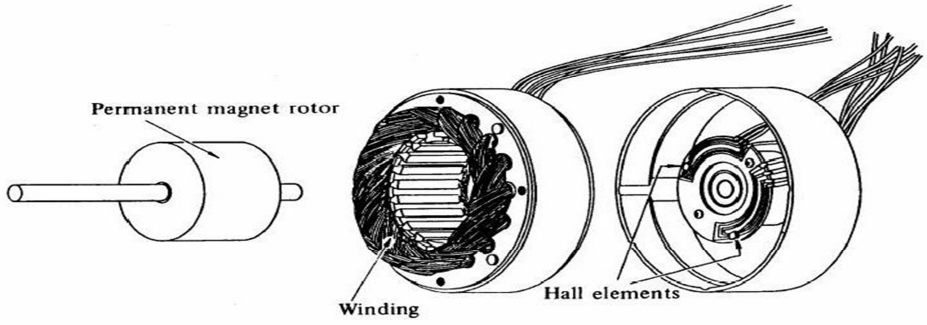

Figure 4 Permanent Magnet Brushless DC motor

There are vital changes amid the DC brush motor and BLDC (Brushless DC motor) motor. The brush DC motor is fitted out with switch, even though an electronic commutator is used in a BLDC (Brushless DC motor) motor. The use of electronic switch suggests that armature winding is on stator and that rotor is accomplished of permanent magnets. In DC brush motor, the windings or armature are always on rotor, as revealed in Figure 5.

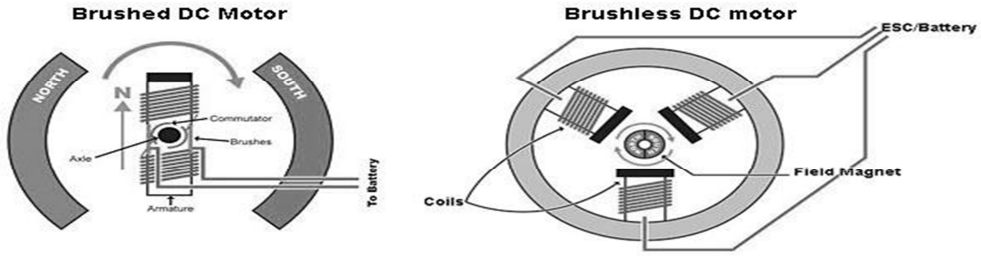

Figure 5 Differences amid brush DC motor and brushless DC motor.

2.1 Construction and Operating Principle

BLDC (Brushless DC) motors are a sort of synchronous motor with permanent magnets. In this manner, the magnetic field produced with stator and rotating magnetic field formed by rotor rotates at similar frequency. Induction Motors (IM) have usually advanced a "slip", but BL-DC (Brushless DC motor) motors do not knowledge it. The BLDC (Brushless DC motor) motors move closer composed in 3-phase, 2-phase and 1-phase configurations. Because of its diversity, stator has similar number of windings. Somewhere else, the 3-phase motors are utmost widespread and most used. This application note apprehensions 3-phase motors. The BL-DC (Brushless DC motor) 3-phase motor drive scheme revealed in figure 6.

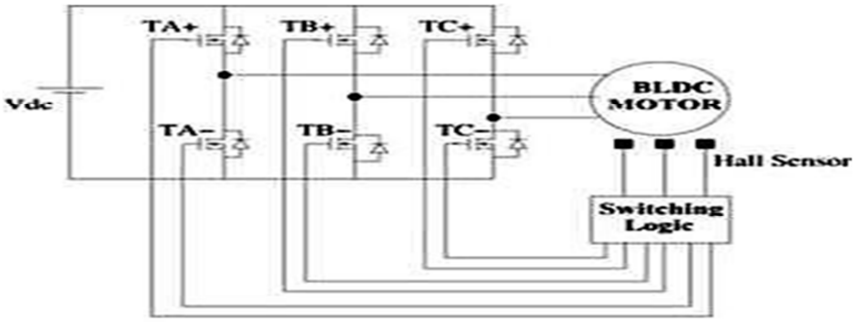

Figure 6 Conventional 6-switch 3-phase BLDC motor drive systems

2.2 Torque/Speed Characteristics

Fig 7 demonstrates an instance of speed/torque characteristics. 2-torque parameters are used to delineate a BL-DC (Brushless DC motor) motor Peak Torque (TP) and reasonable torque (TR). In incessant operation, motor can be loaded up to rated torque. As beforehand stated in a BL-DC (Brushless DC motor) motor, constant torque remnants for a range of speeds up to rated speed. The engine can run at supreme speed, up to 150 percent of rated speed, but torque starts to drop. Applications with recurrent starts and stops and frequent reverse rotation through load on motor necessitate torque better than rated torque.

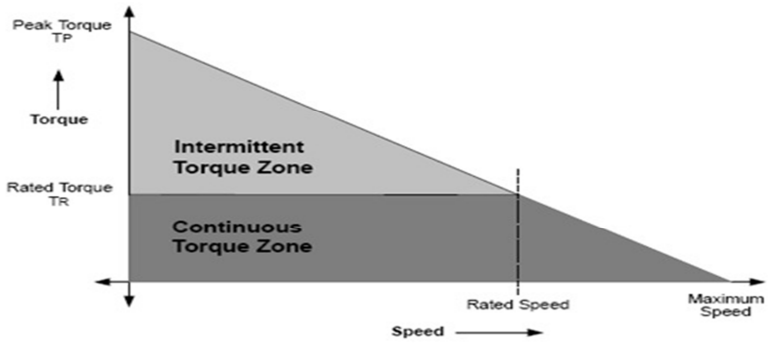

Figure 7 Torque/Speed Characteristics for BLDC Motor

This prerequisite applies for a succinct period, particularly when engine starts at a cessation and by acceleration. Throughout this period, further torque is requisite to overwhelm inertia of load and rotor itself. The motor can convey a higher torque, from maximum to maximum, providing it follows speed torque curve.

3. Comparison of BLDC Motors to other Motor Types

Compared to BLDC (Brushless DC motor) motors and other categories of motors, BLDC (Brushless DC motor) motors have many profits and few shortcomings. Brushless motor necessitate a lesser amount of conservation, so they have a longer life than brushed DC motors. BLDC (Brushless DC motor) motors produce extra power output/frame size over brush DC motors and IM (Induction motors). As rotor is ready with PM (Permanent Magnets), inertia of rotor is lesser than that attained through other kinds of motors. This advances operating cycles with restraint of deceleration and acceleration purposes. Their linear speed/torque characteristics produce expectable speed control. Brushless motors eradicate brush investigation, making them ideal for delimited areas and applications where repairs are not easy. BLDC (Brushless DC motor) motors function much more easily than DC brush motor decreasing EMI (Electromagnetic Interference). Low Potential models are perfect for battery action, convenient devices or medical applications.

Permanent Magnets AC Motors (PMAC) have many benefits over DC brush motors and IM (Induction Motors). Utmost of them are brief as follows:

1. High dynamic response and high efficacy agree to a lessening in size of machine.
2. Torque controlled at zero speed.
3. High torque / inertia ratio; providing fast acceleration and deceleration for a short time.
4. Easiness and robustness, dense design, linear reaction.
5. Extended service life, quiet operation, and high power factor.
6. High torque / volume ratio, high airflow density, upper speed ranges.
7. High weight / power ratio; well thought-out best compared to other accessible electric motors.
8. Improved speed compared to torque characteristics, reduced repairs price.

Brushless motors have numerous further qualities than conventional motors.

1. Brushless machines necessitate virtually no repairs.
2. Speed / torque characteristics are flat; agree to process at all speeds with a rated load.

Though brushed DC motors have ascetically flat characteristics.

1. Electrical noise generation is low for brushless.
2. Brushless motors have little rotor inertia, which increases the dynamic response.
3. They have an upper speed range and an output power ratio compared to size of frame.

4. Closed-Path Control of BLDC Motor

The speed can be controlled in a closed path by determining genuine speed of motor. The impreciseness in position of speed and real speed is deliberate. A more P-I-D (Proportional-Integral-Derivative) controller can be used to intensify the speed error and vigorously regulate PWM (Pulse Width Modulation) duty cycle. Hall signals can be used to calculate speed response for low resolution and low price speed wishes. In a PIC18FXX31 actual scenario timer, it is probable to count amid two Hall transitions. With this account, definite speed of motor can be intended. For speed measurements (high-resolution), an optical encoder can be combined into motor, giving 2-signals from a 90 degree phase difference. By using these signals, cooperation amid speed and way of rotation can be resolved. Also, mostly encoders deliver a 3rd index signal, which is a pulse/turn. This can be used for arranging applications. Optical encoders are reachable with modified pulse/revolutions choosing ranging from 100's to 1000's.

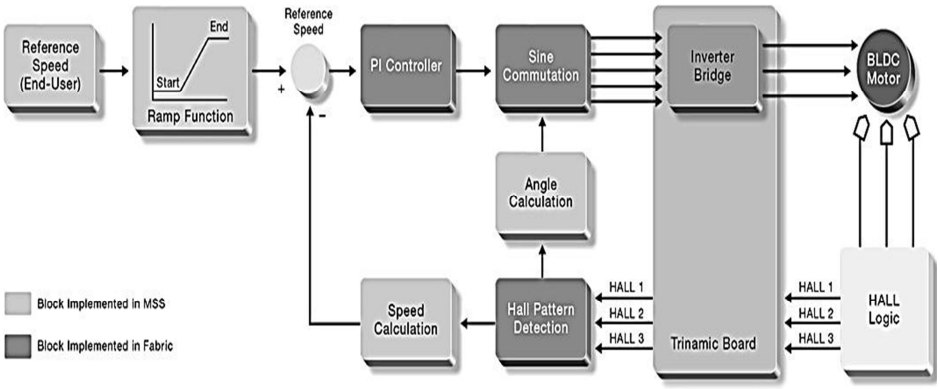

Figure 8Closed-Path Control of BLDC motor

5. Sensorless Operation of BLDC Motor

The BLDCs (Brushless DC motors) motor, with their trapezoidal EMF profile, demands 6-separate rotor position info for process of inverter. These are archetypally generated by Hall Effect switching sensors set in motor. Although, it is common facts that these sensors have numerous shortcomings. They intensification price of engine and need special mechanical assemblies to mount. In addition, Hall Effect sensors are temperature sensitive and limit process of motor. They could diminish system consistency because of additional equipment and wiring. A less sensitive sensor technique is utmost consistent scheme used in severe environments. There are 2-independent techniques for describing configuration of room. The choice of which method to use will depend on info provided.

1. Switching progress founded on hall provided.
2. Back Wave forms of emf.

Switching sequence founded on hall provided:

This technique is easy and needs smallest effort on part of user. This info is typically provided as a table or chart and can carry dissimilar titles, for instance "Block Switching" or " BLDC (Brushless DC motor) Motor Timing Figure". Figure shows Gate blocks and Decoder used to transform signals into gate pulses by numerous logical processes.

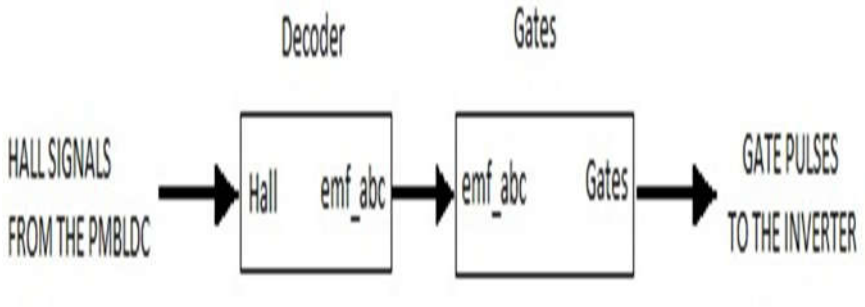

Figure 9 Hall signals to Gate pulses conversion

5.1 Back Emf of Brushless DC Motor

When a BLDC (Brushless DC motor) motor is running, each one winding creates a voltage well-known as "Back-Force" or "Electro-motive Force", which clash with terminal voltage provided to windings as stated by Lenz's Law. The polarity of this rear electro-motive force is opposite to potential under tension.

Electro-motive force commonly depends on 3-factors:

1) Rotor angular velocity
2) Magnetic field produced by rotor magnets
3) The number of turns in stator windings

Once engine is designed, magnetic-field of rotor and number of turns in stator windings keep on constant. The feature that governs rear EMF is rotor speed or angular velocity, and as velocity rises, rear electro-motive force also rises.

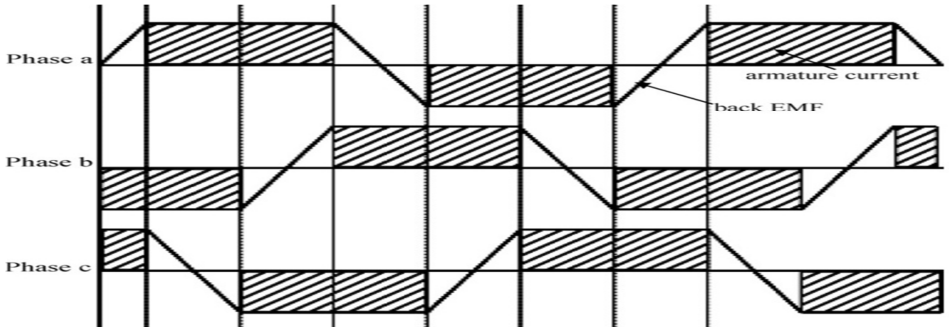

Figure 10 Ideal Back Electro-motive force of BLDC (Brushless DC) Motor

Back EMF,
(E) α NlrBω

Where:
l= Length of rotor
B = Rotor magnetic field density
N = Number of winding turns/phase

r = Internal radius of rotor,
w = Motor's angular velocity.

The technical description of engine provides a parameter so-called electro-motive return force constant that can be used to estimate electromotor return force for a given certain speed. The potential divergence across to a winding can be premeditated by subtracting value of rear EMF from supply potential. The motors are designed by means of constant rear EMF so that when engine is running at minor speed, potential divergence amid rear electro-motive force and supply potential will be adequate for motor to pull rated current and convey nominal torque. If motor is driven in advance of rated speed, rear electro-motive force can rise meaningfully, thus diminishing potential difference across to winding, which lowers consumed current, ensuing in a decreasing torque curve. The end point of velocity curve might be once supply potential is equal to sum of rear electro-motive force and losses in motor, someplace torque and current are equivalent to zero.

6. PID Controller

PID (Proportional Integral Derivative) controllers are in all possibility essentially generally used controller edifices in industry. They do, on the other hand extant numerous challenges to control and instrumentation engineers in feature of tuning of gains requisite for stability and decent transient appearance. There are numerous dictatorial rules used in PID (Proportional Integral Derivative) tuning. An example is that tactical by Nichols and Zeigler in year 1940. A PID (Proportional Integral Derivative) controller is a non-specific control Path feedback mechanism (controller) almost used in industrial control arrangement. At this time by means of help of PID (Proportional Integral Derivative) controller calculates an "error" value as variance amid a measured technique modifiable and a requisite set point. The controller tries to diminution error by amending process control inputs.

The PID (Proportional Integral Derivative) controller guesstimate (algorithm) to include 3-separate steady parameters, and is consequently occasionally supposed 3-term control.

The Proportional (P), Integral (I) and Derivative (D), standards can be subsequent in terms of time: "P" depends on current error, "I" on accretion of former errors, and "D" is a projection of future errors, depends on present rate of alteration.

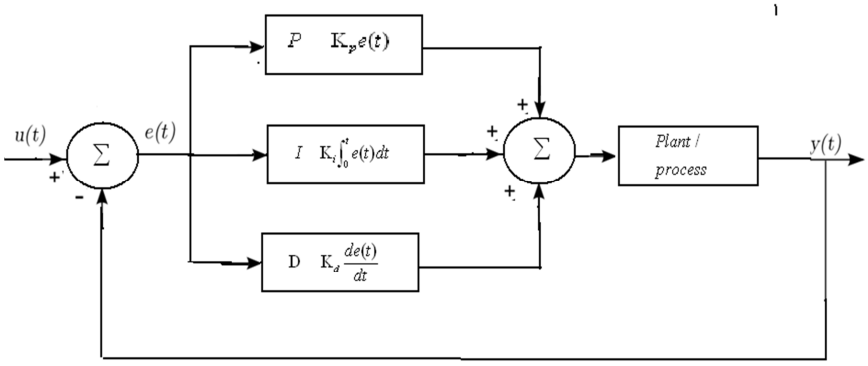

Figure 11 Basic PID Controller

In absenteeism of information of basic process, a PID (Proportional Integral Derivative) controller has conventionally been considered to be most admirable controller.

A number of applications may involve using only 1 or 2 activities to offer appropriate system control. It can be proficient by setting other parameters to "zero". PI (Proportional

Integral) controllers are comparatively common, meanwhile derivative action is sensitive to measurement sound, even though absence of an integral term might prevent scheme from attainment its target value because of control action.

Describing u(t) as controller output, concluding structure of PID (Proportional Integral Derivative) set of rules is:

$$u(t) = MV\ (t) = K_p e(t) + K_i \int_0^t e(\tau)\, d\tau + K_d \frac{d}{dt} e(t)$$

Where
K_p = Proportional gain
K_d = Derivative gain
K_i = Integral gain
t = Time or prompt time (the present)
: varying of integration; lies on values from time 0 to the present t.
e = Error = SP-PV

7. Typical BLDC Motor Applications

BLDC (Brushless DC motor) motors discover applications in each segment of open market. Automation, Industrial controls, Aviation, Automotive and Appliance and so on, enclose applications for BLDC (Brushless DC motor) motors. In another place of these, we can sort out the kind of BLDC (Brushless DC motor) motor control into 3-major types:

1) Varying loads
2) Constant load
3) Positioning application

7.1 APPLICATIONS WITH CONSTANT LOADS

These are kinds of applications where an adjustable speed is more significant than keeping correctness of speed at a position speed. Furthermore, acceleration and deceleration duty are not actively changing. In these kinds of applications, load is straight connected to motor shaft. For pumps, paradigm fans and blowers arise under these kinds of applications. These applications claim inexpensive controllers, mostly functional in open-Path.

7.2 APPLICATIONS WITH VARYING LOADS

These are kinds of applications where load on motor differs over a speed series. These applications can demand hasty control correctness and decent dynamic retorts. In appliances, residence washers, dryers and compressors are good instances. These applications can utilize speed feed-back devices and can run in semi-closed path or in entire closed path. These applications use erudite control algorithms, hence complicating controller. Also, this increases price of whole system.

CONCLUSION

The basic fundamental and research study of PID speed controller, BLDC (Brushless DC) motor; Hysteresis Current Controller is exemplified in research paper. PMBLDC (Permanent Magnet Brushless DC Motors) is more broadly used in high-performance applications due to their higher efficacy, higher torque in low-speed range, high power density, low repairs and less noise than other motors. In this research paper closed-loop speed control of BLDC (Brushless DC) motor drive with hysteresis current controller loop is carried-out.

REFERENCES

[1] S. Joshua, E.Sathishkumar, S.Ramasankar, "Advanced Rotor Position Detection Technique For Sensorless Bldc Motor Control", International Journal Of Soft Computing And Engineering (IJSCE) ISSN: 2231-2307, Volume-2, Issue-1, March 2012

[2] Jianwen Shao, Dennis Nolan, and Thomas Hopkins "A Novel Direct Back Electro Motive Force Detection for Sensorless Brushless DC (BLDC) Motor Drives" IEEE 2002

[3] P. P. Carney and J. F Watson, "Review Of Position-Sensor Less Operation of Permanent-Magnet Machines," IEEE Trans. Ind. Electron., Vol. 53, No. 2, Pp. 352–362, Apr. 2006.

[4] C.-H. Chen and M.-Y. Cheng, "New Cost Effective Sensor Less Commutation Method for Brushless Dc Motors Without Phase Shift Circuit and Neutral Voltage," IEEE Trans. Power Electron. Vol. 22, No. 2, Pp. 644–653, Mar 2007.

[5] C.-G. Kim, J.-H.Lee, H.-W.Kim, and M.-J. You, "Study on Maximum Torque Generation for Sensor Less Controlled Brushless Dc Motor with Trapezoidal Back Electro Motive Force," IEE Proc.-Electro. Power Appl., Vol. 152, No. 2, Pp. 277–291, Mar. 2005.

[6] J.X. She And S. Iwasaki, "Sensor Less Control Of Ultrahigh-Speed Pm Brushless Motor Using PLL And Third Harmonic Back Electro Motive Force," IEEE Trans. Ind. Electron., Vol. 53, No. 2, Pp. 421–428, Apr. 2006.

[7] P. Damodharan, R. Sandeep, and K. Vasudevan, "Simple Position Sensor Less Starting Method For Brushless Dc Motor," IEEE Electro. Power Appl., Vol. 2, No. 1, Pp. 49–55, Jan. 2008.

[8] D. K. Kim, K. W. Lee, And B. I. Kwon, "Commutation Torque Ripple Reduction In A Position Sensor Less Brushless Dc Motor Drive," IEEE Trans. Power Electron., Vol. 21, No. 6, Pp. 1762–1768, Nov. 2006

[9] C.-G. Kim, J.-H.Lee, H.-W.Kim, and M.-J.Youn, "Study on Maximum Torque Generation for Sensor Less Controlled Brushless Dc Motor with Trapezoidal Back Electro Motive Force," IEE Proc.-Electro. Power Appl., Vol. 152, No. 2, Pp. 277–291, Mar. 2005.

[10] J. H. Song And I. Choy, "Commutation Torque Ripple Reduction In Brushless Dc Motor Drives Using A Single Dc Current Sensor," IEEE Trans. Power Electron., Vol. 19, No. 2, Pp. 312–319, Mar. 2004.

[11] S. Wu, Y. Li, X. Miao, "Comparison Of Signal Injection Methods For Sensor Less Control Of PMSM At Very Low Speeds", IEEE Power Electronics Specialists Conference, PESC 2007, June 2007 Pp. 568 – 573.

[12] M. Eskola, H. Tuusa, "Sensor Less Control of Salient Pole PMSM Using A Low – Frequency Signal Injection", European Conference on Power Electronics and Applications, Sept. 2005, Pp. 1- 10

[13] S. Ogasawara, H. Akagi, "An Approach To Real-Time Position Estimation At Zero And Low Speed For A Pm Motor Based On Saliency", IEEE Transactions On Industry Applications, Vol. 34, No. 1, Jan./Feb 1998, Pp. 163-168

[14] Joohnsheok Kim, Seung Ki Sul, "New Stand-Still Position Detection Strategy For Pmsm Drive Without Rotational Transducers", Conference Proceedings Of The Ninth Annual

Applied Power Electronics Conference And Exposition, Apec '94., Vol. 1, 13-17 Feb. 1994, Pp.363 – 369

[15]. Us Patent No.4654566, "Control System, Method Of Operating An Electronically Commutated Motor, And Laundering Apparatus," Granted To Ge.

[16]. T.Endo, F.Tajima, Et Al., "Microcomputer Controlled Brushless Motor without A Shaft Mounted Position Sensor," Ipec-Tokyo, 1983.