Power System Stability and Maximum Power Point Tracking For PV Microgrid: A Review

***Kiran Kumari[1], Deepmala[2], Dr. E Vijay Kumar[3]**
[1]M.Tech Scholar, [2]Assistant Professor, [3]Associate Professor
[1, 2, 3] Department of Electrical Engineering
[1, 2, 3] SRK University, Bhopal, Madhya Pradesh, India
[1]aryashkp@gmail.com, [2]deepmala.eee@gmail.com*

Abstract: *This research paper gives the basic fundamental study or research of Power system stability and MPPT (Maximum Power Point Tracking) for PV microgrid application. Renewable or Non-conventional energy based (DGs) Distributed Generators play a leading role in electricity or power production, with escalation in global warming. DG (Distributed Generation) based on Biomass, Wind, mini-hydro along through use of fuel cells, solar energy, and micro-turbines will give important impetus in near future. Benefits like environmental affability, expandability and litheness have made Distributed Generation, powered by several non-conventional and renewable micro sources, an eye-catching option for configuring contemporary electrical grids. A microgrid contains of bunch of loads and DGs that work as a solitary controllable scheme. As an incorporated energy delivery scheme microgrid can work in parallel with or isolated from main electricity grid. The microgrid idea acquaint with diminution of various reverse conversions in an separate DC or AC grid and also facilitates links to flexible renewable or non-conventional AC and DC sources and loads to electricity or power systems. The interconnection of DGs (Distributed Generations) to utility / grid through converters (power electronic) has risen worried about safe procedure and fortification of equipment's. To consumer microgrid can be designed to see their special necessities; for instance, augmentation of local dependability, diminution of feeder losses, local voltages sustenance, augmented efficacy through use of heat (waste), rectification of voltage sag or uninterruptible electricity or power supply.*

Keywords: *MPPT (Maximum Power Point Tracking), PV microgrid, DGs (Distributed Generations), DFIG (Doubly Fed Induction Generator).*

1. Introduction to Microgrid

With the arrival of energy distribution technology in subsequent century, numerous styles will emerge that will variation demands of energy distribution. These variations are together on demand side, where obtainability and energy efficacy are required, and on supply side, where incorporation of decentralized generation and peak diminution technologies should be deliberated.

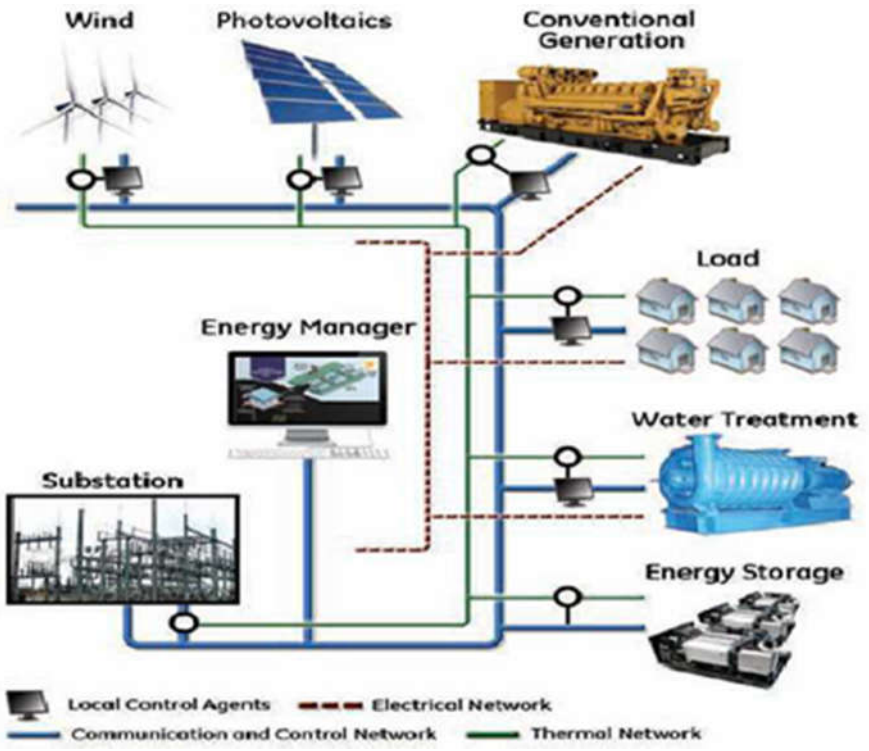

Figure 1 Microgrid Power Schemes

Presently, it needs an escalation in energy number, size, overestimation and DER (Distributed Energy Resources) of electrical systems. Even though several technologies are used for lesser scale production (micro sources) and certain resources are used, these are solar, hydro or wind. A start with delicate sources of current load. Furthermore, end users associated to low potential (230 Volt and 110 Volt in Europe) are a smaller amount likely to cut supply since manageable loads and micro sources of micro energy storage schemes may work. In island mode in austere system disorders. It is today entitled a micro network. Figure 1 demonstrates a archetypal microgrid.

Archetypal Microgrids are size of a low potential distributor and have a capability of 1 MVA and a topographical range of 1 km. In excess of 90 percent of domestic low-potential consumers archetypally supply electricity through underground cable and rest through overhead lines. Microgrids a lot offer consumers with electricity & heat over combined heat & power plants, fuel cells, gas turbines, wind turbines, photovoltaic (PV) schemes, and more.

Energy stowage schemes typically contain batteries and flywheels. The memory in microgrid agrees to rotation standby of large generators in conventional set-up, thus confirming the balance amid energy production and consumption, particularly in case of rapid load or generation changes. From a consumer's perspective, micro-grids meet together thermal and electrical necessities, cultivating local trustworthiness, diminishing emissions, cultivating auxiliary potential performance, diminishing potential for voltage dips and diminishing energy prices . From usefulness's perspective, use of distributed power sources might potentially diminish demand for transmission and distribution facilities. It is clear that DG (Distributed Generation) near loads diminishes currents in distribution and transmission circuits. This has two significant insinuations: diminishing losses and substituting network resources. Furthermore, occurrence of near-production production might mend end-user service excellence. Microgrids can offer network support through times of stress by

alleviating congestion and supporting retrieval from failures. The improvement of micro-grids can help diminish emissions and alleviate climate change. This is because of obtainability and improvement of decentralized generation skills based on non-conventional sources and micro sources categorized by very small emissions.

Microgrids suggestion end-users, conveniences and society numerous benefits: cultivating energy efficacy, diminishing total energy consumption, diminishing greenhouse gas emissions and noxious waste, cultivating excellence and steadfastness of services, economical replacement of electrical structure.

The methodological defies allied with working and controlling micro-grids are enormous. In order to confirm stable process in event of a grid fiasco, it is essential to fix erudite control policies of micro-grid inverters, providing steadiness and excellence of power in island processes. The frequency and potential are statically constant at flexible loads.

In this perspective, idea of microgrid has stimulated many investigators and concerned the attention of American, European and Japanese governmental societies. However, numerous procedural glitches are allied with the integration and process of micro-networks.

MERITS:

- Capability to detach from utility grid for the period of disturbance and operate autonomously.
- It diminishes demand on utility grid as a result prevents grid failure.
- Use both heat energy and electricity, so that overall efficiency rises.

DEMERITS:

- Frequency, voltage and Power quality must be at acceptable limits.
- Needs battery tanks to store which involves space and repairs.
- Resynchronization to utility-grid is problematic.
- Safety is tough.

2. Photovoltaic System

The photovoltaic effect was first noted by French scientist Edmond Becquerel in year 1839. He suggested that certain materials have property of creating lesser amounts of electric current when open to sunlight. In year 1905, A. Einstein clarified nature of light and photoelectric effect which has become basic principle for photovoltaic technology. In year 1954 first photovoltaic module was made by Bell Laboratories.

A photovoltaic scheme makes use of one or more solar panels to transform solar energy into electricity. It contains of several components which comprise photovoltaic modules, electrical connections and mechanical setup and mountings and means of regulating or/and adjusting the electrical output.

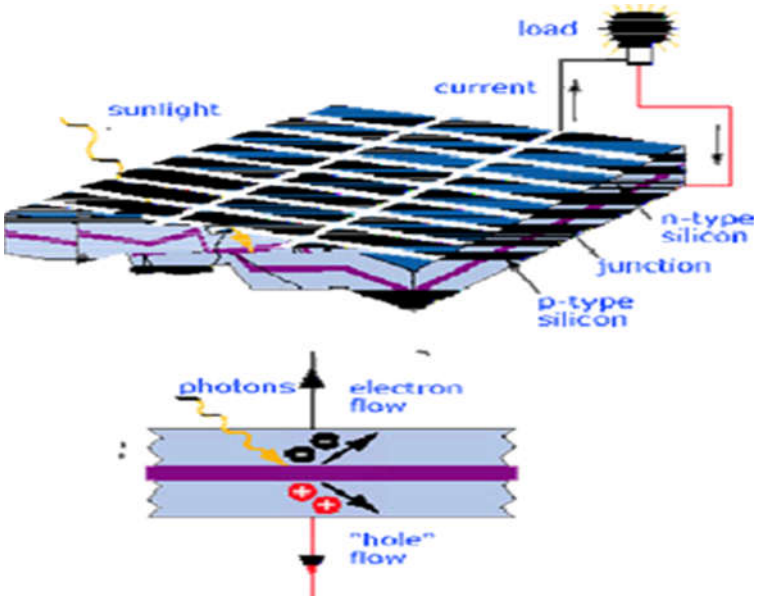

Figure 2 Basic Structure of Photovoltaic Cell

The basic elements of photovoltaic cells are semiconductor materials, for instance silicon. A thin semiconductor wafer makes an electric field, on one side positive (+ve) and negative (-ve) on the other, for solar cells. When the sunlight or light energy hits solar cell, electrons are knocked movable from atoms in semiconductor material. As soon as electrical conductors are allied to positive (+ve) and negative (-ve) sides an electrical circuit is made and electrons are caught in form of an electric current viz., electricity. A Photovoltaic cell can either be circular or square in assembly.

2.1 Working of Photovoltaic (PV) Cell

The fundamental principle behind process of a PV (Photovoltaic) cell is photoelectric effect. In this effect electron gets evicted from conduction band as a consequence of absorption of sunlight or solar energy of a certain wavelength (λ) by matter (non-metallic solids or metallic, gases or liquids). So, in a PV (Photovoltaic) cell, when sunlight or solar energy hits its surface, certain portion of solar energy is engrossed in semiconductor material.

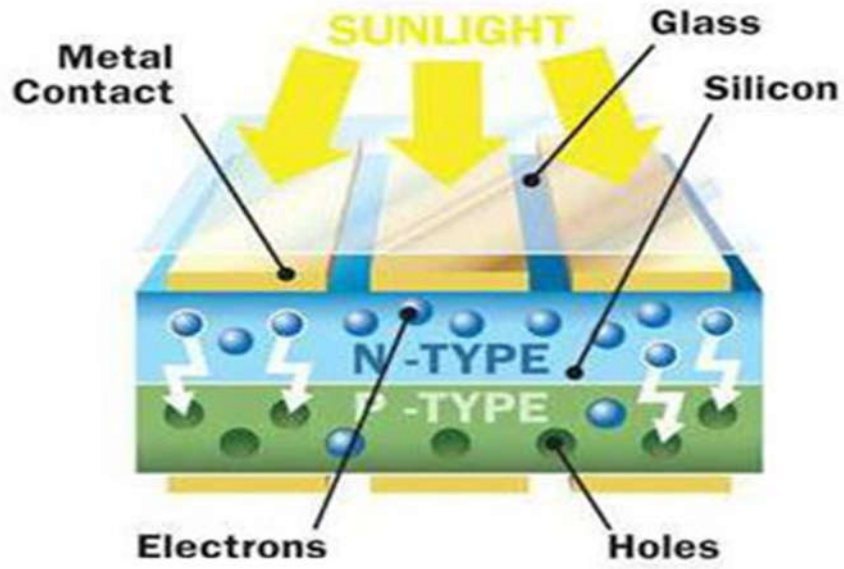

Figure 3 Working of PV (Photovoltaic) Cell

The electron (e^-) from valence band moves or transfer to conduction band when engrossed energy is better than band-gap energy of semiconductor. By these electrons-holes duos are created in lightened region of semiconductor. The electrons made in conduction-band are now unrestricted to move. These unrestricted electrons (e^-) are compulsory to travel in a particular direction by act of electric field extant in PV (Photovoltaic) cells. These electrons (e^-) flowing comprise current and can be drawn for exterior use by linking a metal-plate on bottom and top of PV (Photovoltaic) cell. This voltage and current produces essential power.

Merits

- Solar cells Electricity is clean and silent. Since they don't use fuel other than sunlight, PV (Photovoltaic) schemes do not discharge any injurious air or water pollution into environment, diminish natural resources, or imperil animal or human health.
- PV (Photovoltaic) schemes are silent and visually inconspicuous.
- Small-scale solar plants can take benefit of vacant space on roof-tops of prevailing buildings.
- PV (Photovoltaic) cells were initially developed for use in space, where overhaul is enormously costly, if not impossible. PV (Photovoltaic) still powers almost every satellite circling earth since it works reliably for long periods of time by means of virtually no repairs.
- Solar energy is a locally existing renewable resource. It doesn't requisite to be introduced from other areas of country or across world. This diminishes environmental influences allied by means of transportation and also diminishes our dependency on imported oil. And, different fuels that are mined and harvested, when use solar energy to produce electricity we don't diminish or alter resource.
- A PV (Photovoltaic) scheme can be built to any size based on energy necessities. Furthermore, owner of a PV (Photovoltaic) scheme can expand or move it

if energy needs change. For example, owners can increase modules every few years as energy usage and economic resources rise.

Demerits

- Specific toxic chemicals are used in PV (Photovoltaic) production procedure. These environmental influences are minor and can be effortlessly controlled over recycling and appropriate disposal.

- Solar energy is fairly more costly to produce than conventional sources of energy owing in part to price of manufacturing PV (Photovoltaic) devices and in part to change efficacies of equipment. As change efficacies continue to rise and manufacturing prices continue to descend, PV (Photovoltaic) will become progressively price competitive with conventional energies.

- Solar power is an adjustable energy source, by means of energy production reliant on sun. Solar amenities may produce certainly not power at all specific of time, which might lead to an energy lack if excessively of a region's power arise from solar power.

3. Maximum Power Point Tracking (MPPT)

As an electronic scheme MPPT (Maximum Power Point Tracker) functions PV (Photovoltaic) modules in a way that permits PV (Photovoltaic) modules to produce all power they are proficient of. It isn't a mechanical tracking scheme which travels physically modules to make them fact more directly at sun. Meanwhile MPPT (Maximum Power Point Tracking) is a fully electronic system, it differs module's functioning point so that modules will be capable to convey maximum existing power. As outputs of PV (Photovoltaic) scheme are dependent on temperature, irradiation, and load characteristic MPPT (Maximum Power Point Tracking) can't convey output potential flawlessly. For this motive MPPT (Maximum Power Point Tracking) is requisite to be executing in PV (Photovoltaic) scheme to maximize PV (Photovoltaic) array output potential.

3.1 Need of Maximum Power Point Tracking (MPPT)

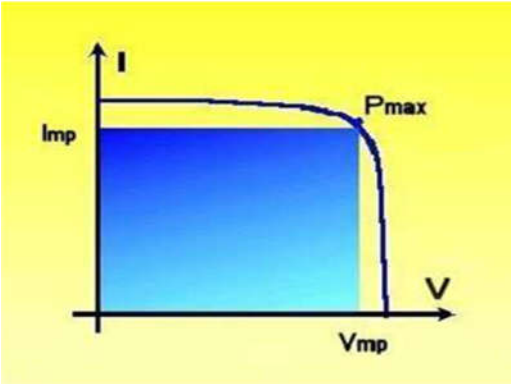

Figure 4 MPPT Characteristic

In power-vs.-voltage curve of a PV (Photovoltaic) module there happens a single utmost of power, i.e. there happens a peak power analogous to a specific potential and current. The efficacy of solar-PV (Photovoltaic) module is low approximately 13 percent. Subsequently module efficacy is low it is required to work module at peak power point so that maximum

power can be conveyed to load under changing temperature and irradiation situations. This maximized power assistances to improve use of solar-PV (Photovoltaic) module. A MPPT (Maximum Power Point Tracker) excerpts maximum power from PV (Photovoltaic) module and transfers that electrical power to load. As an interfacing device DC-DC converter transfers that maximum power from solar-PV (Photovoltaic) module to load. By varying duty cycle, load impedance is varied and accorded at point of peak power by means of source so as to transferal maximum power.

3.2 Maximum Power Point Tracking (MPPT) Algorithms

There are dissimilar algorithms which assistance to track peak power point of solar-PV (Photovoltaic) module automatically. The algorithms can be inscribed as;

a) Perturb and observe
b) Incremental conductance
c) Parasitic capacitance
d) Voltage based peak power tracking
e) Current Based peak power tracking

Merits & Demerits

S. No.	MPPT Technique	Merits	Demerits
1	Constant Voltage	Easy, simple to implement, fast	Not highly correct, V_{oc} wants to measure at consistent interval, Merely used where temperature is different very little.
2	Constant Current	Easy, simple to implement, fast	Less correct, I_{sc} wants to be measured at consistent interval.
3	Perturb & Observe	simple to implement, Iterative tactic, Solar characteristic not essential to be recognized previously	Less correct operating point oscillate around Maximum Power Point, Not appropriate for fast varying condition; Oscillation can be diminished by decreasing perturbation step size, which slows down Maximum Power Point Tracking.
4	RCC technique	simple to implement, easy circuitry	Potential and current both requisite to be measured.
5	Temperature technique	simple to implement, easy circuitry	Potential and Temperature both requisite to be measured
6	Beta technique	Tracking speed is great	Appropriate for varying solar radiation on the other hand temperature must be constant.

4. Wind Turbines

With use of power of wind, turbines (wind turbine) produce electricity to drive a generator. Generally wind passes over blades, generating lift and utilizing a turning force. Inside nacelle, the revolving blades turn a shaft then goes into a gearbox. The gearbox assistances in growing revolving speed for operation of generator and utilize fields (magnetic) to transform rotational energy into electrical energy. Then output electrical power goes to a transformer, which

transforms electricity to suitable potential for power collection scheme. A wind turbine excerpts kinetic energy from swept area of blades.

The power comprised in wind is assumed by kinetic energy of flowing air mass/unit time. The eqn. for power comprised in wind can then be written as:

$$P_{air} = \frac{1}{2}\,(air\ mass\ per\ unit\ time)(V_\infty)^2$$
$$= \frac{1}{2}(\rho A V_\infty)(V_\infty)^2$$
$$= \tfrac{1}{2}\rho A V_\infty^3 \quad (1)$$

Even though Eq. (1) refers to the availability of wind power which is transferred to wind turbine rotor is diminished by power coefficient (Cp).

$$C_p = \frac{P_{wind\ turbine}}{P_{air}} \quad (2)$$

A peak value of power coefficient (Cp) is well-defined by Bertz limit, which states that a turbine can certainly not excerpt more than 59.3 percent of power from an air-stream. In realism, wind turbine rotors have maximum power coefficient (Cp) values in range 25-45 percent.

$$P_{wind\ turbine} = C_p \times P_{air} \quad (3)$$

It is as well conventional to express a tip speed ratio λ as,

$$\lambda = \frac{\omega R}{V_\infty} \quad (4)$$

4.1 DFIG (Doubly Fed Induction Generator) Scheme

The DFIM (Doubly Fed Induction Machine) is most broadly machine in these days. The IM (Induction Machine) can be used as a motor or generator. However demand in direction of motor is less due to its mechanical wear at slip-rings but they have gained their importance for generator application in water and wind power plant due to its clear adoptability capability and nature of docility. This section defines aspect investigation of overall DFIG (Doubly Fed Induction Generator) scheme along by means of back to back PWM (Pulse Width Modulation) voltage source converters.

4.2 Modeling of Induction Generator

DFIG (Doubly Fed Induction Generator) is a WRIM (Wound Rotor Induction Machine) types, its stator contains of stator core, stator frame, 3-phase (poly phase) distributed winding, bearing, two end covers etc. The stator core is stack of cylindrical steel laminations which are slotted beside their inner boundary for housing the 3-phase (poly phase) winding. Its rotor contains of slots in outer boundary to house windings like stator. The machine operates on principle of Electromagnetic Induction and energy transfer takes place through transfer action. Consequently machine can signify as a transformer which is rotatory in action not stationary. This section elucidates basic mathematical demonstrating of DFIG (Doubly Fed Induction Generator). In this section machine demonstrating is elucidated through taking two phase parameters into consideration.

Merits

DFIG (Doubly Fed Induction Generator) is an adjustable speed generator and consequently has the adjustable speed benefits compared to fixed speed generators. It added fully changes existing wind power over a broader range of wind speeds by means of less mechanical difficulty but more electronic and electrical intricacy.

DFIG (Doubly Fed Induction Generator) delivers adjustable speed by means of a minor power converter compared to further variable-speed generators, only rotor power necessities to be converted. That is archetypally around 30 percent of total power. Diminished power conversion means diminished losses and augmented efficacy. On the other hand converter must be designed to transferal power in either way, making it more composite than power converters for additional kinds of variable-speed generators. That extra intricacy does offer capability to control generator power factor and offer reactive power to grid.

The complete apparatus, setting up and repairs price is seemingly lower for DFIG (Doubly Fed Induction Generator) schemes for certain range of power levels. At lesser power levels, variable-speed PMGS (Permanent Magnet Generator Systems) appear to be lesser price alternative. There may be a significant variety over which those two substitutes can participate correspondingly.

Demerits

A shortcoming of DFIG (Doubly Fed Induction Generator) compared to PMSG (Permanent Magnet Synchronous Generator) is that DFIG (Doubly Fed Induction Generator) needs a speed growing gearbox amid wind turbine and generator while PMSG (Permanent Magnet Synchronous Generator) can be built with an adequate number of poles to permit direct drive.

5. AC/DC Microgrid

The conception of micro-grid is deliberated as a group of loads and micro sources which functions as a single controllable scheme that offers together power and heat to its local area. This notion provides a novel archetype for definition of DG (Distributed Generation) process. To utility micro-grid can be assumed of as a controlled cell of electrical power system. For instance this cell might be measured as a single dispatch able load, which can retort in seconds to meet necessities of transmission scheme. To consumer micro-grid can be strategy to meet their special necessities; for instance, augmentation of local reliability, lessening of feeder losses, local voltages care, augmented efficacy through use remaining heat, voltage sag rectification. The key purpose of this idea is to accelerate recognition of benefit offered by small scale DG (Distributed Generators) similar capability to supply remaining heat during time of essential. The micro-grid or distribution network sub-system will generate not as much of trouble to utility network than conventional micro-generation if there is appropriate and intelligent coordination of micro-generation and loads.

Micro-grid considered as a ‘grid friendly entity” and doesn’t give unwanted effects to attaching distribution network i.e. operation policy of distribution grid doesn’t have to be changed.

5.1 Configuration of Hybrid Microgrid

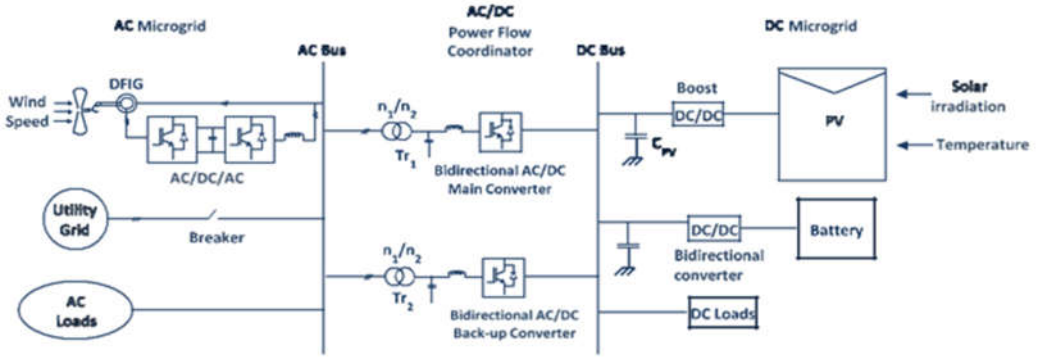

Figure 5 Hybrids AC/DC Microgrid Scheme

The configuration of hybrid scheme is revealed in Figure 5 where numerous DC and AC sources and loads are associated to corresponding DC and AC networks. The DC and AC links are linked together through 2-transformers and two four-quadrant functioning 3-phase (Poly Phase) converters. The AC bus of hybrid-grid is tied to utility grid.

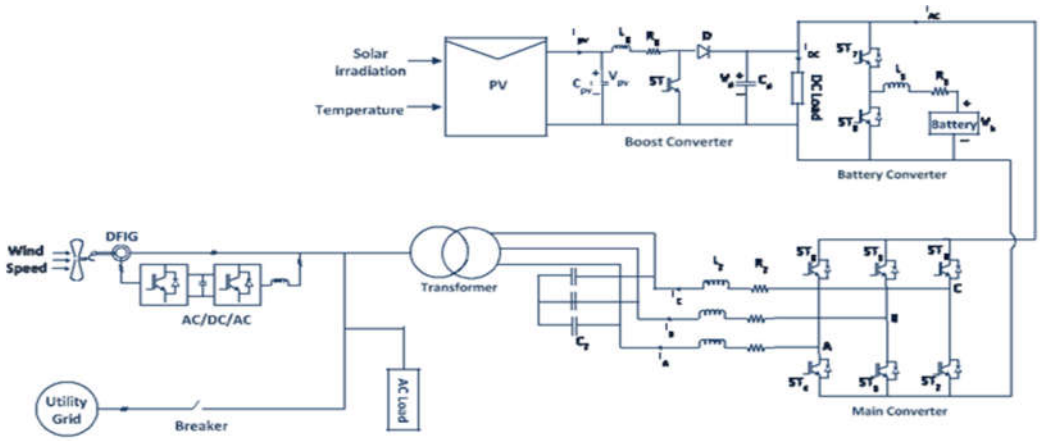

Figure 6 Representation of Hybrid Micro-grid

Figure 6 defines hybrid scheme configuration which contains of DC and AC grid. The DC and AC grids have their analogous sources, loads and energy stowage elements, and are interrelated by a 3-phase converter. The AC bus is allied to utility grid through a circuit breaker and transformer.

In anticipated scheme, PV (Photovoltaic) arrays are allied to DC bus through boost-converter to simulate DC sources. A DFIG (Doubly Fed Induction Generator) wind generation scheme is allied to AC bus to simulate AC sources. A battery with bi-directional DC-DC converter is allied to DC bus as energy stowage. An adjustable AC and DC load are allied to their AC and DC buses to simulate numerous loads.

PV (Photovoltaic) modules are allied in parallel and series. As solar radiation or emission level and ambient temperature vicissitudes output power of solar panel varies. A capacitor (C) is added to PV (Photovoltaic) terminal so as to conquer high frequency ripples of PV (Photovoltaic) output potential. The bi-directional DC-DC converter is considered to sustain stable DC-bus potential through discharging or charging battery when system works in self-

sufficient operation mode. The 3-converters (boost converter, bi-directional converter and main converter) share a common DC-bus. A wind generation scheme contains of DFIG (Doubly Fed Induction Generator) with back to back AC-DC-AC PWM (Pulse Width Modulation) converter allied amid rotor through slip rings and AC-bus. The DC and AC buses are coupled through a 3-phase transformer and a main bi-directional power flow converter to interchange power amid AC and DC sides. The transformer helps to step up AC potential of main converter to utility potential level and to separate DC and AC grids.

Merits

- Have much lesser economic commitments.
- Use renewable resources later are more ecologically friendly with lesser carbon footprints.
- Necessitate less technical skills to work and trust more on automation.
- Are isolated from some grid disorder or outage.
- Place customer out of grip of big corporations that run generation networks.

Demerits

- Accessibility of renewable energy resources is an important prerequisite. Transporting fossil fuels to both Microgrid community is not cheap way.
- As evolution takes place and demand rises, Microgrids capability have to be increased by extra resources.
- A high and erudite level of computerization for observing and controlling grid and to enclose harmonics and additional parameter fluctuations is a essential to make Microgrids practicable.
- Accessibility and consistency of stowage devices like super capacitors or batteries will play a significant role in achievement of Microgrid.

CONCLUSION

This research paper presents relevant research work on power system stability and MPPT (Maximum Power Point Tracking) for PV microgrid application. The paper describes significant information about PV (Photovoltaic) microgrid. This paper is distributed in to four sections: Microgrid, PV (Photovoltaic) system, MPPT (Maximum Power Point Tracking) and DFIG (Doubly Fed Induction Generator). The merits and demerits of different sections are also briefly deliberated in this paper.

REFERENCES

[1] S. Bose, Y. Liu, K. Bahei-Eldin, J.de Bedout, and M. Adamiak, "Tie line Controls in Microgrid Applications," in IREP Symposium Bulk Power System Dynamics and Control VII, Revitalizing Operational Reliability, pp. 1-9, Aug. 2007.

[2] Michael Angelo Pedrasa and Ted Spooner, "A Survey of Techniques Used to Control Microgrid Generation and Storage during Island Operation," in AUPEC, 2006.

[3] F. D. Kanellos, A. I. Tsouchnikas, and N. D. Hatziargyriou, "Microgrid Simulation during Grid-Connected and Islanded Mode of Operation," in Int. Conf. Power Systems Transients (IPST'05), June. 2005.

[4] Y. W. Li, D. M. Vilathgamuwa, and P. C. Loh, Design, analysis, and real-time testing of a controller for multi bus microgrid system, IEEE Trans. Power Electron., vol. 19, pp. 1195-1204, Sep. 2004.

[5] R. H. Lasseter and P. Paigi, "Microgrid: A conceptual solution," in Proc. IEEE-PESC'04, pp. 4285-4290, 2004.

[6] F. Katiraei and M. R. Iravani, "Power Management St rategies for a Microgrid with Multiple Distributed Generation Units," IEEE trans. Power System, vol. 21, no. 4, Nov. 2006.

[7] P. Piagi and R. H. Lasseter, "Autonomous control of microgrids," in Proc. IEEE-PES'06 , 2006, IEEE, 2006.

[8] M. Barnes, J. Kondoh, H. Asano, and J. Oyarzabal, " Real-World Micro Grids- an Overview," in IEEE Int. Conf. Systems of Systems Engineering, pp.1-8, 2007.

[9] Chi Jin, Poh Chiang Loh, Peng Wang, Yang Mi, and Frede Blaabjerg, "Autonomous Operation of Hybrid AC-DC Microgrids," in IEEE Int. Conf. Sustainable Energy Technologies, pp. 1-7, 2010.

[10] Y. Zoka, H. Sasaki, N.Yomo, K. Kawahara, C. C. Liu, "An Interaction Problem of Distributed Generators Installed in a Micro Grid," i n Proc. IEEE Elect. Utility Deregulation, Restructuring and Power Technologies, pp. 795-799, Apr. 2004.

[11] H. Nikkhajoei, R. H. Lasseter, "Microgrid Protection," in IEEE Power Engineering Society General Meeting, pp. 1-6, 2007.

[12] R. H. Lasseter, "Micro Grids," in Proc. IEEE-PES'02, pp. 305-308, 2002.

[13] Zhenhua Jiang, and Xunwei Yu, "Hybrid DC- and AC-Linked Microgrids: Towards Integration of Distributed Energy Resources," in IEEE Energy2030 Conf., pp.1-8, 2008.

[14] Bo Dong, Yong dong Li, Zhixue Zheng, Lie Xu "Control Strategies of Microgrid with Hybrid DC and AC Buses," in Power Electronics and Applications, EPE'11,14thEuropean Conf., pp. 1-8, 2011.

[15] Dong Bo, Yong dong Li , and Zedong Zheng, "Energy Management of Hybrid DC and AC Bus Linked Microgrid," in IEEE Int. Symposium Power Electronics for Distributed Generation System, pp. 713-716, 2010.

[16] Xiong Liu, Peng Wang, and Poh Chiang Loh, "A Hybrid AC/DC Microgrid and Its Coordination Control," IEEE Trans. Smart Grid, vol. 2, no. 2, pp. 278-286 June. 2011.