LMS algorithm for mitigation of power quality problems in PV-DSTATCOM system

Nimita Gajjar[1], Tejas Zaveri[2]
Gujarat Technological University
[1]nimita_gajjar@hotmail.com, [2]tejas1009@gmail.com.

Abstract: *This paper examines the multi-functionality of the PV inverter for voltage control, compensation of reactive power & correction of power factor that raises the inverter utilization factor to two folds that otherwise remain idle at night. The VSI is controlled by the least means square (LMS) algorithm which uses adaptive-linear-element (Adaline)-based current estimator to achieve power quality improvement. The VSI is utilized in full STATCOM mode during nighttime and in partial STATCOM mode during daytime as inverter capacity is not fully utilized for real power generation. The entire system is modelled in MATLAB Simulink & results are discussed for unbalanced linear/ nonlinear load.*

Keywords: **Photovoltaic (PV) system, Smart Inverter, DSTATCOM, Voltage Control, Power Factor Correction, Least means square (LMS)**

1. Introduction

The concept of smart inerter is gaining popularity now a day as not only it can convert DC power to AC power but also can perform other functions. Voltage regulation, unity power factor operation, control of active power, low voltage ride throughfault ride through etc. are some examples of these functions other than active power transfer. These functions can support distribution system operations to help increase the penetration of the renewable energy based systems in electric power systems. A unique concept of utilizing PV solar farms as STATCOM during nighttime for providing different grid support functions was proposed in 2009. In addition, the VSI can exhibit such multifunctionality during daytime, as the full capacity of inverter is not utilized for PV power transfer to load or grid. [1], [2]. STATCOM is a VSC based FACTS device which can either sink or source reactive power even for very low voltage [3]. For increased connectivity of wind farms and for increased power transmission capability, PV solar farm can be utilized as STATCOM [4]-[6]. The implementation of STATCOM on an RTDS and its subsequent hardware implementation with DSP/FPGA platform is presented in [4], [7]. For utilization of the PV inverter as STATCOM to provide reactive power control during nighttime and during daytime together with production of real power, a sophisticated control is required. The extraction of reference current and the method of generation of pulse width-modulation (PWM) signals based on the reference current plays major factors in controlling of STATCOM. Various algorithms for reference current extraction like PQ/IRPT theory, instantaneous symmetrical components, neural network-based algorithms, rotating reference frame theory, various

genetic algorithms etc. have been documented in the literature [8]-[12]. The theory of instantaneous reactive power proposed by Akagi et.all. works on the estimation of active and reactive powers by transforming three-phase to two-phase but under unbalance or non-sinusoidal source voltage condition it will not work satisfactorily. The SRF theory is based on transformation from the stationary reference frame abc to the synchronous reference frame dq and therefore the compensator can be designed with better dynamics. For estimating load reactive power and harmonics in the current, some of the researcher's suggested Adaline-based algorithm [11]. LMS algorithm is implemented in shunt active filters for compensation of reactive power & harmonics [13]. Although various variants of conventional LMS algorithm is proposed in literature for implementation in DSTATCOM system, its implementation in PV-DSTATCOM system is still limited.

This paper deals with the control of STATCOM for active power transfer with dc link control and also mitigation of harmonics, reactive power compensation and unbalanced loading. Adaline based least mean square (LMS) algorithm is used to extract reference source [13]. The LMS algorithm [16], [17], is a simple and fast method of current extraction. The main highlight of the paper is

- Active power flow to the grid and to the connected loads, as well as PQ issues mitigation through the proposed PV-DSTATCOM system.
- Application of LMS algorithm for extraction of active and reactive components of load currents.
- To ensure maximum power extraction with varying solar insolation levels from a PV array using InC based MPPT method.

2. System description & control algorithm

The proposed system consists of an SPV array along with VSI (which is acting as a DSTATCOM) connected to three-phase grid is as shown in fig.1. In addition, loads (linear & non-linear) are connected at PCC along with the RC filters. A single-stage converter topology is considered with three-phase grid connected PV-DSTATCOM system. It uses an InC based MPPT approach to extract maximum power from a SPV array at varying environmental conditions. The PV system of 7.5Kw utilizes a IGBT-based VSI of rated capacity 7.5 kVA operating at a switching frequency of 10 kHz

2.1. MPPT technique

To extract maximum power from a SPV array at varying solar insolation and environmental conditions, several MPPT algorithms had reported in [13]-[14]. An incremental conductance (InC) approach for MPPT is found to be fast and easy to implement in comparison to other algorithms. The InC based MPPT algorithm is implemented as is reported in the literature [15]. To track the MPP below equations are considered.

$\Delta I/\Delta V = -I/V$ At Max Power Point, $\Delta V_n = 0$,

$\Delta I/\Delta V > -I/V$ Left of Max Power Point, $\Delta V_n = +\delta$

$\Delta I/\Delta V > -I/V$ Right of Max Power Point, $\Delta V_n = -\delta$

2.2. Extraction of fundamental active & reactive component of load current:

Fig. 2 shows a block diagram of ADALINE based LMS algorithm for generation of reference currents. For generation of reference grid currents, the LMS control algorithm extract weights for the fundamental active and reactive components of load currents. The error signal (e(n)) is estimated using load current ($i_L(n)$), weight of the components (w(n)) and input signal (u(n)). The estimated weight of phase 'a' load current's fundamental active component is given as,

$$w_{pa}(k+1) = w_{pa}(k) + \eta\{i_{La}(k) - w_{pa}(k)u_{pa}(k)\}u_{pa}(k) \quad (1)$$

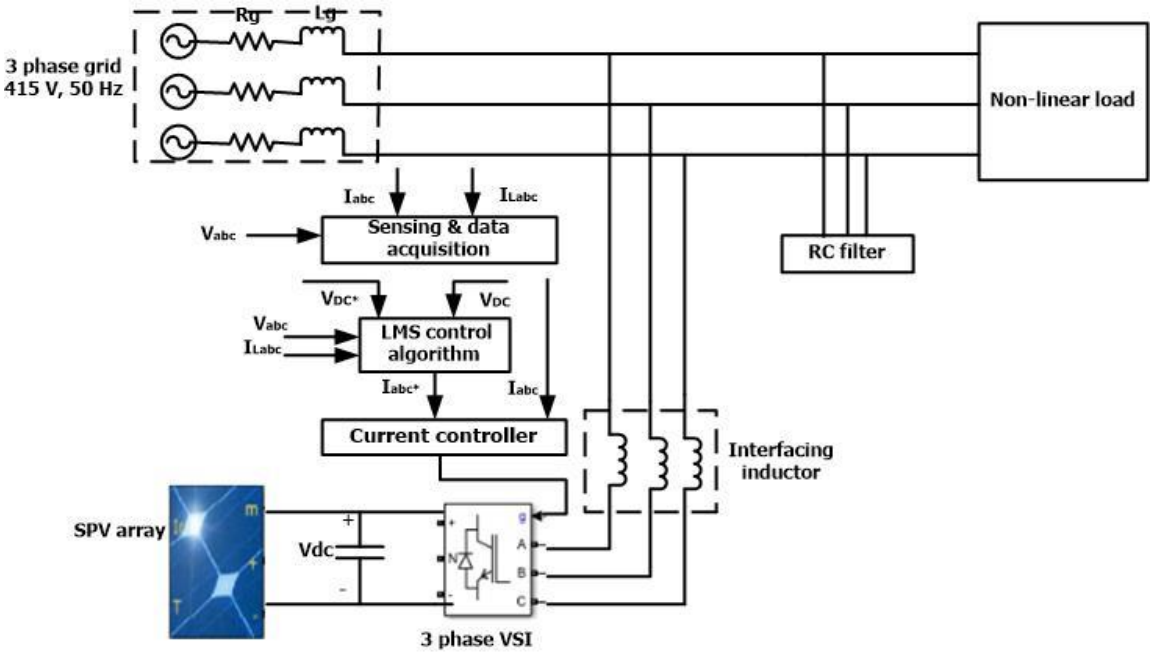

Figure 1. Schematic diagram of the system

Similarly, for other two phases

$$w_{pb}(k+1) = w_{pb}(k) + \eta\{i_{Lb}(k) - w_{pb}(k)u_{pb}(k)\}u_{pb}(k) \quad (2)$$

$$w_{pc}(k+1) = w_{pc}(k) + \eta\{i_{Lc}(k) - w_{pc}(k)u_{pc}(k)\}u_{pc}(k) \quad (3)$$

Likewise, the estimated weight of the load current fundamental reactive component of all three phase is as given below in eq. 4 to 6,

$$w_{qa}(k+1) = w_{qa}(k) + \eta\{i_{La}(k) - w_{qa}(k)u_{qa}(k)\}u_{qa}(k) \quad (4)$$

$$w_{qb}(k+1) = w_{qb}(k) + \eta\{i_{Lb}(k) - w_{qb}(k)u_{qb}(k)\}u_{qb}(k) \quad (5)$$

$$w_{qc}(k+1) = w_{qc}(k) + \eta\{i_{Lc}(k) - w_{qc}(k)u_{qc}(k)\}u_{qc}(k) \quad (6)$$

The value of η (convergence coefficient) maintains a balance between convergence rate and accuracy of estimation. The convergence coefficient lies within functional range of 0.01 and 1.0. The rate of weight convergence increases with large value of η but at the same time leads to inappropriate results, whereas for lower value of η the precision of the calculation increases, but leads to slow weight convergence. At a value equal to 0.2, best tradeoff is observed in terms of accuracy and convergence rate.

2.3. Estimation of active & reactive loss component (DC link voltage control):

The error between voltage at PCC and reference terminal voltage (v_t^*) at nth sampled instant is given as

$$v_{te}(k) = v_t^*(k) - v_t(k) \quad (7)$$

This error signal is passed to PI controller. The output signal of the PI controller is (w_{cq}) which maintains the voltage at the PCC as,

$$w_{cq}(k+1) = w_{cq}(k) + k_{pt}\{v_{te}(k+1) - v_{te}(k)\} + k_{it}v_{te}(k+1) \quad (8)$$

Where, K_{it} and K_{pt} are integral and proportional gains of PI controller.

Similarly, the DC link voltage error is calculated as,

$$v_{de}(k) = v_{dc}^*(k) - v_{dc}(k) \quad (9)$$

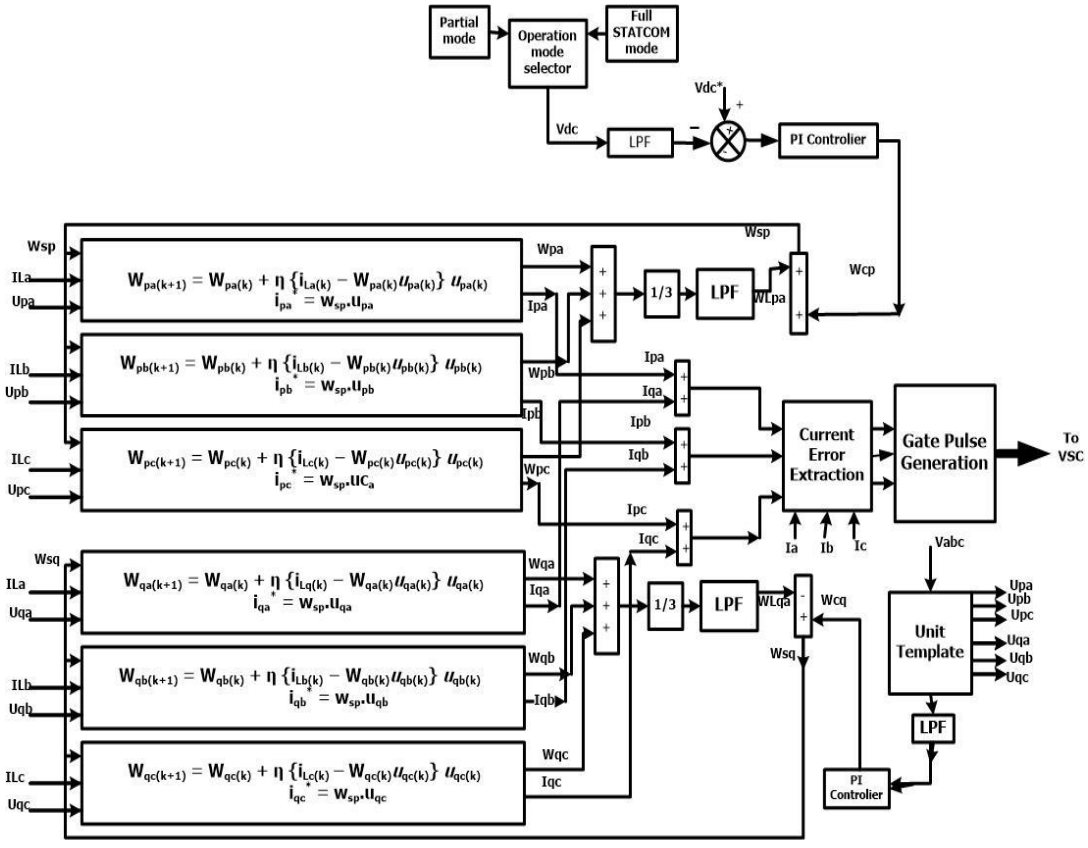

Figure 2. Control scheme of the system

Where, the value of reference DC link voltage is switched between reference value of DSTATCOM or reference value for PV system depending on whether PV power is available or not. This estimated error is then passed to a proportional integral controller and the output is the active loss component (w_{cp}) used to regulate the DC link voltage is estimated as,

$$w_{cp}(k+1) = w_{cp}(k) + k_p\left(v_{dc}(k+1) - v_{dc}(k)\right) + k_i\left(v_{dc}(k+1)\right) \quad (10)$$

Where K_p & K_i are proportional & integral gain of PI controller.

2.4. Generation of reference grid currents & gate pulses:

The calculated value of total active weight component (w_{pt}) of reference grid currents is given as,

$$w_{pt} = w_{Lp} + w_{cp}$$

Where $w_{Lp} = (w_{pa} + w_{pb} + w_{pc})/3$ (12)

W_{Lp} = total average active component of load current

W_{cp} = active loss component

The weights are averaged to eliminate the effect of unbalance in the current components. Similarly, the reactive weight component (W_{TR}) of the reference grid currents is

$$w_{qt} = w_{cq} - w_{Lq} \quad (12)$$

Where W_{Lq} = total average reactive component of load current

W_{cq} = reactive loss component

3. RESULTS AND DISCUSSION

The proposed system is designed and simulated in MATLAB/Simulink platform. Sim-power system (SPS) toolbox is used for simulation. The SPV array is designed for maximum power of 7.5 kW and the PV inverter is rated at 7.5KVA. In addition, the design of its components is carried out in detail, such as the DC link voltage and capacitance, the interface inductance and the ripple filter. The appendix typically includes details on the designed components. Under nonlinear operating conditions (balanced and unbalanced) and variable solar insolation, the performance of the proposed system is simulated.

3.1. Performance under unbalance non-linear load for PFC mode:

The results for operation under unbalanced non-linear load is as shown in fig. 3. The unbalance is created by disconnecting phase ‘c’ of load at 0.08s. The grid currents are maintained sinusoidal, the PCC voltage & DC link voltage are also maintained constant. PV inverter supplies the harmonics injected by nonlinear load.

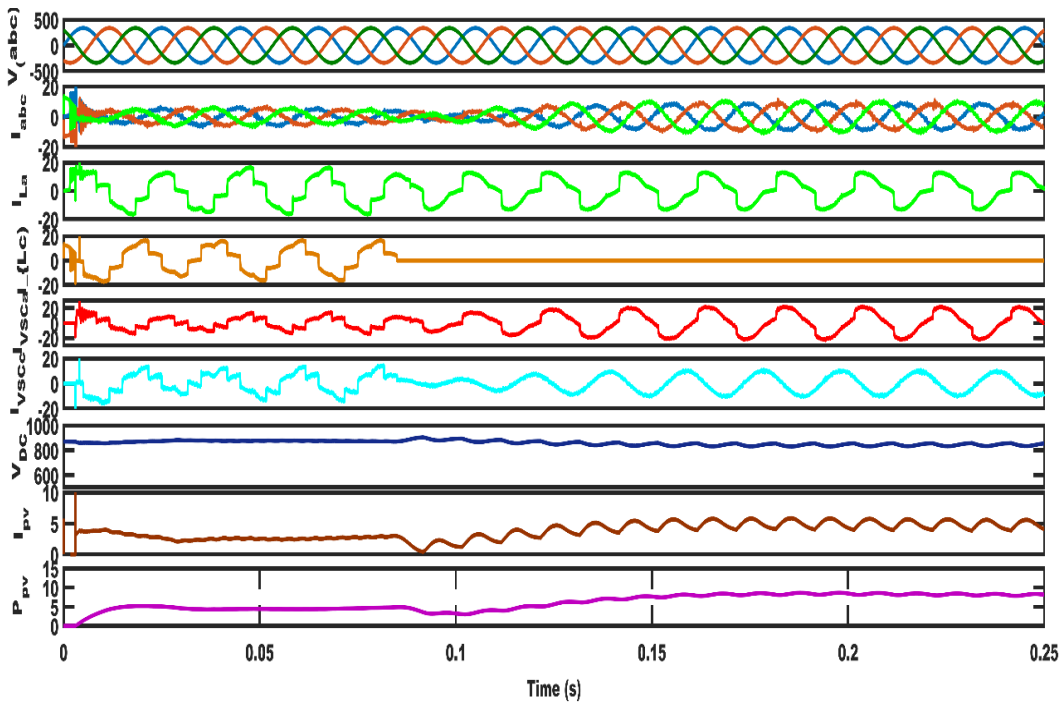

Figure 3. Performance under unbalance non-linear load for PFC mode

3.2. Performance of the system for unbalance non-linear load in ZVR mode:

Figure. 4 demonstrates the proposed system's dynamic behaviour under unbalanced nonlinear load. As is evident from the fig. 4 sinusoidal grid currents (i_{abc}) are maintained even when load phase 'c' is disconnected at 0.25 sec. The VSC offsets the harmonics injected by the nonlinear load. At 415 V and 700 V respectively, the PCC voltage and DC link voltage are regulated. In addition, at UPF, the SPV system continues to supply full power.

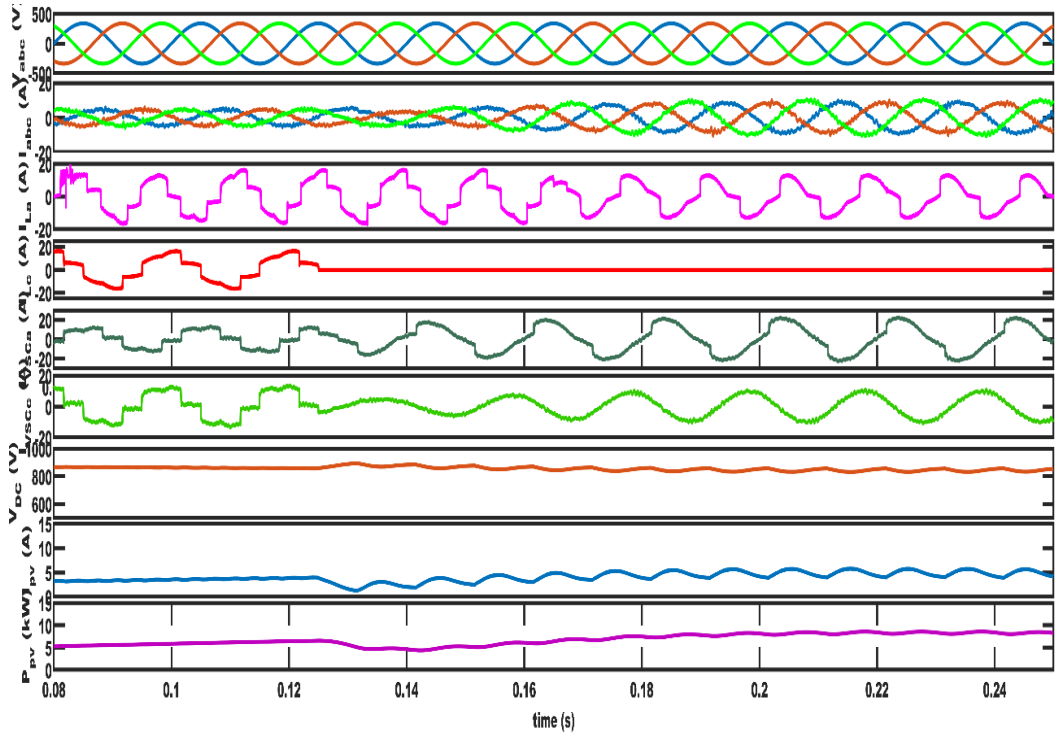

Figure 4. Performance under unbalance non-linear load for ZVR mode

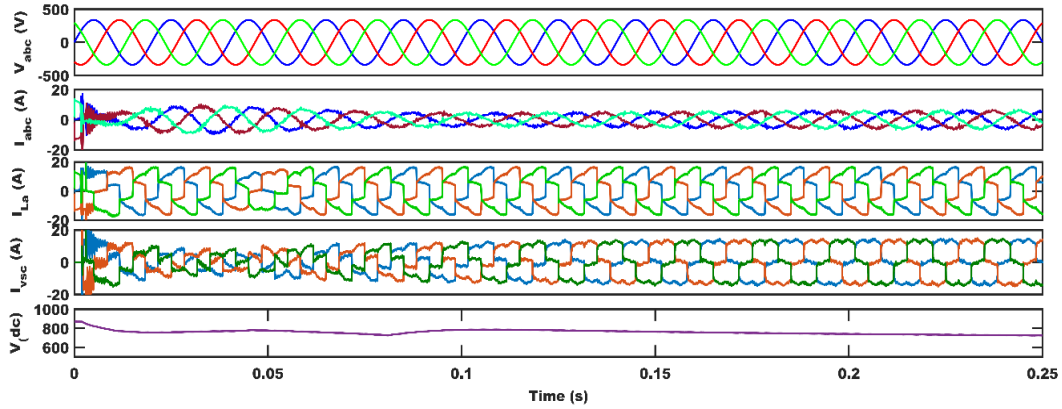

(a)

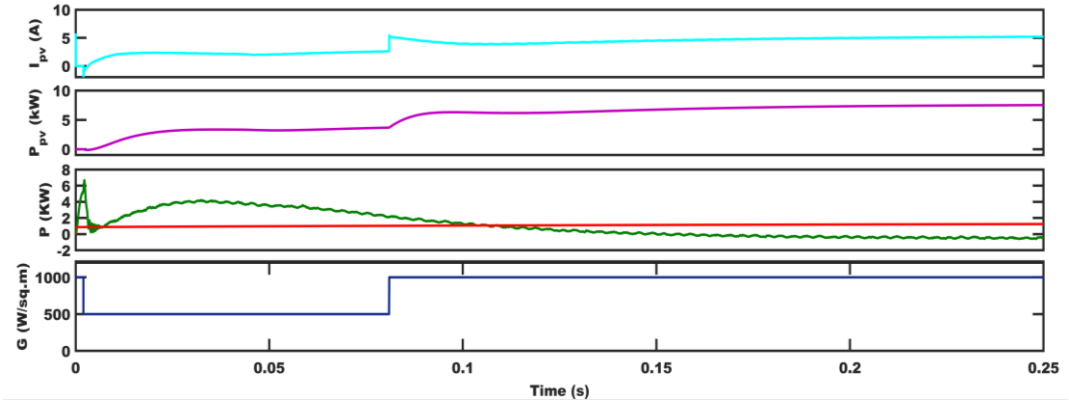

(b)

Figure 5 (a-b) Performance under variable solar irradiance

3.3. Performance under variable solar insolation:

The system behavior under variable solar insolation is as shown in fig.5 (a-b). The solar irradiance is initially kept at 500W/m^2 and it then increases to 1000W/m^2. The extracted SPV power is supplied to load & excesss power is supplied to grid. Hence, the grid power (Pg) in Fig. 5 (b), goes from positive value to zero value. In addition to supplying extracted PV power to load, it also supports reactive power required to maintain UPF. The grid currents are sinusoidal & DC link voltage is regulated.

4. CONCLUSION

The LMS control algorithm for PV-DSTATCOM system has been validated through MATLAB simulations. The proposed system is subjected to various test conditions like load unbalancing and variable solar insolation and test results have shown that the performance of the system is satisfactory under various test conditions. The system continues to support various grid functions like maintaining UPF, providing reactive power support to regulate voltage, load balancing, and harmonics elimination while extracting maximum power from the PV array. The simplicity and fast response of this LMS algorithm makes it suitable for application in PV-DSTATCOM system. Also overall efficiency of the system increases with the use of single stage converter topology as it reduces the losses in devices.

APPENDICES

A. SPV System Parameters

PV array voltage, VMPP = 700 V; PV array current, IMPP = 14 A; PV array power, PMPP = 7.5kW;

DC bus voltage, Vdc = 900 V; DC bus capacitor, Cdc = 10 µF, interfacing inductor, Lf = 2.5 mH; sampling time, Ts = 1 µs; grid voltage, vab = 400 V (rms); Vd = 900 V.

B. System and Load Parameters

Ripple filter, Rf = 5 Ω and Cf = 6 µF, DC PI controller, Kpd = 0.2 and Kid = 0.2; AC PI controller, Kpt = 0.9 and Kit = 0.5; nonlinear load = 3-phase diode bridge with RL load.

References

[1] *R. K. Varma, V. Khadkikar, and R. Seethapathy, Nighttime application of PV solar farm as STATCOM to regulate grid voltage, IEEE Transactions on Energy Conversion, Dec 2009.*

[2] *R. K. Varma, V. Khadkikar, and S. A. Rahman, Utilization of distributed generator inverters as STATCOM, Sep. 15 2010, PCT Patent application PCT/CA2010/001419.*

[3] *E. M. Siavashi, Smart PV inverter control for distribution systems, in Electronic Thesis and Dissertation Repository. 3065. https://ir.lib.uwo.ca/etd/3065, 2015.*

[4] *R. K. Varma, S. A. Rahman, A. C. Mahendra, R. Seethapathy, and T. Vanderheide, Novel nighttime application of PV solar farms as STATCOM (PV-STATCOM), IEEE Power and Energy Society General Meeting, July 2012*

[5] *R. K. Varma, S. A. Rahman, and T. Vanderheide, New control of PV solar farm as STATCOM (PV-STATCOM) for increasing grid power transmission limits during night and day, IEEE Transactions on Power Delivery, April 2015.*

[6] *V. Dinavahi, R. Iravani, and R. Bonert, Design of a real-time digital simulator for a d-statcom system, IEEE Transactions on Industrial Electronics, Oct 2004*

[7] *H. Akagi, E. H. Watanabe, and M. Aredes, Instantaneous Power Theory and Applications to Power Conditioning. Hoboken, NJ: Wiley, 2007.*

[8] *D. M. Divan, S. Bhattacharya, and B. Banerjee, Synchronous frame harmonic isolator using active series filter, in Proc. Eur. Power Electron. Conf., 1991*

[9] *B. Singh, S. S. Murthy, and S. Gupta, STATCOM-based voltage regulator for self-excited induction generator feeding nonlinear loads, IEEE Trans. Ind. Electron., Oct. 2006.*

[10] *S. Mishra and C. N. Bhende, Bacterial foraging technique-based optimized active power filter for load compensation, IEEE Trans. Power Del., Jan. 2007.*

[11] *H. C. Lin, Intelligent neural network-based fast power system harmonic detection, IEEE Trans. Ind. Electron., Feb. 2007.*

[12] *M. A. G. de Brito, L. Galotto, L. P. Sampaio, G. d. A. e Melo and C. A. Canesin, Evaluation of the main MPPT techniques for photovoltaic applications, IEEE Trans. Ind. Elect., March 2013.*

[13] *Bhim Singh, Jitendra Solanki, An Implementation of an Adaptive Control Algorithm for a Three-Phase Shunt Active Filter, IEEE transactions on industrial electronics, august 2009*

[14] *Q. Mei, M. Shan, L. Liu and J. M. Guerrero, A novel improved variable step-size incremental-resistance MPPT method for PV systems, IEEE Trans. Ind. Elect., June 2011.*

[15] *B.Farhanh-Boroujeny, Adaptive filters: Theory & application, John Wiley & sons, 1999.*

[16] *L. Bangyin, D. Shanxu, L. Fei and X. Pengwei, Analysis and improvement of maximum power point tracking algorithm based on incremental conductance method for photovoltaic array, in Proc. 7th Int. Conf. Power Elect. Drive Systems, 27-30 Nov. 2007*

[17] N. G. Hingorani and L. Gyugyi, Understanding FACTS. IEEE press, 2000