DESIGN OF PIEZORESISTIVE MICROCANTILEVER FOR MASS SENSING

V. Jyothi, B. Rajesh Kumar, V. Suresh, Ch. Indrani

Department of EIE, GITAM deemed to be UNIVERSITY, Visakhapatnam - 530045

ABSTRACT

In this paper the design of a piezoresistive microcantilever for mass sensing is presented. For this a plain microcantilever beam was designed with dimensions 200µm length, 100µm width and 2µm thickness using silicon as material. A single layer and double layer piezoresistive microcantilever were designed and compared for sensitivity. The analytical and simulation results show good enhancement of deflection sensitivity for a single layer microcantilever.

INTRODUCTION

Piezoresistive transducer is one of the prominent transducers, which translates from mechanical domain to electrical domain. MEMS (Micro Electro Mechanical Systems) is a process technology used to create tiny integrated devices using electrical and mechanical systems. Their size can range from micrometres to millimetres. Piezoresistive MEMS cantilever sensors perform well in liquid environments to measure the surface stress changes induced from biochemical reactions. Response of the Piezoresistive MEMS cantilever is change in resistance due to the stress induced during cantilever bending while loaded. MEMS cantilever sensor relies on deflection of the cantilever beam. When the cantilever is loaded, MEMS cantilever will bend. As this deformation occur, the structure changes shape. The concept is that deflection occurs when a disturbance or loading is applied to the cantilever its free end or along the MEMS cantilever surface. Elements of MEMS are micro actuators, micro sensors, microelectronics and micro structures. Micro sensors and micro actuators are considered as Transducers which are used to covert energy from one form to another. Micro sensors are used to convert mechanical signal to electrical signal. Even though these are very small but they cause effect at macro scale level. Similar to IC fabrication, the MEMS devices can also be manufactured using batch fabrication techniques on a small chip at relatively low cost.

Sensing Principles of Micro cantilever

Optical: The basic operation principle of this type of micro cantilever lies in optical reflection from the back surface of the beam, while the front surface interacts with the sample.

Piezoresistive: Bending a micro cantilever beam introduces directional stress, which will cause a resistance change if applied to a resistor. This quality, the dependence of electrical resistivity on stress, is called piezo resistance.

Methodology

The design process involves four steps. (1) Analytical design of the microcantilever (2) Design of piezoresistor using COMSOL (3) Design of single layer and double layer piezoresistive microcantilever (4) FEM simulations using COMSOL (5) Validation with analytical results

Cantilever Physics:

The micro cantilever displacement can be derived as function of differential stress by using Stoney's equation as:

$$\delta = \frac{3L^2(1-\vartheta)}{Et^2}(\sigma 1 - \sigma 2)$$

where,

δ is the cantilever displacement,

v is the Poison's ratio,

E is the Young's modulus,

(σ1-σ2) is the differential surface stress,

L and t are the length and thickness of the cantilever beam, respectively.

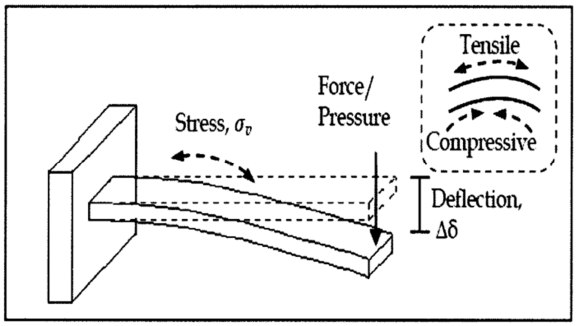

Fig. 1: Deflection of micro cantilever

The highest sensitivity can be achieved with a piezoresistor placed at the surface of the cantilever beam near the base. At that point, the stress can be calculated to be:

$$\sigma_{max} = \frac{6L}{Wt^2}F = \frac{3Et}{2L^2}\delta$$

Where,

F is the applied force and

W is the width of the cantilever beam.

The resulting fractional resistance change is given by:

$$\frac{\Delta R}{R} = \pi_l \sigma_{max}$$

Where,

π_l is the longitudinal Piezoresistive coefficient of Poly silicon at the operating temperature.

Design of piezoresistor on the micro cantilever:

Piezoresistive effect explains the changing electrical resistance of a material due to applied mechanical stress. The effect causes a change in resistance value. This effect has been used for semiconductor based sensor such as germanium, silicon and polycrystalline silicon. The sensitivity of piezoresistor can be increased by using boron doped polysilicon. Piezoresistor placed near to the fixed end yields the maximum resistance change with respect to the deflection in the beam due to surface stress. Silicon-dioxide is used as material for cantilever and silicon is used as material for piezoresistor.

We used silicon as material for cantilever and polysilicon as material for piezoresistor. By this we observed improvement in deflection compared to sio2 Piezoresistive cantilever. Improvement in deflection results to increase in stress, this tends to increase in resistivity which causes more sensitivity.

SIMULATIONS:

Simulations are done using COMSOL software

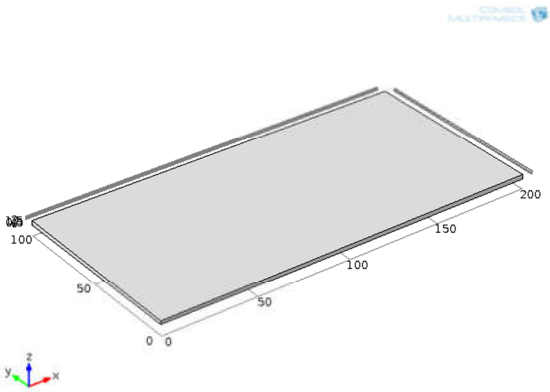

Fig.2: Schematic of micro cantilever

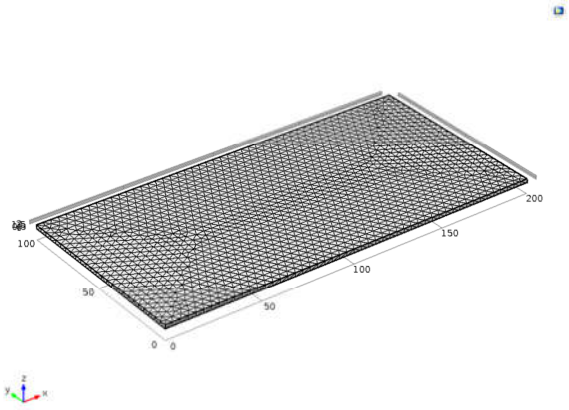

Fig.3: Meshing used in finite element simulations

Effect of Length Variation:

The length of cantilever is varied and the deflection is noted. It is observed that as length is increasing deflection increases. At 200µm highest deflection is obtained. So, we selected that as optimized value.

S.No.	Length (um)	Thickness (um)	Deflection (nm)	
			Theoretical	Simulation
1	50	8.00	0.024816	0.0049
2	100	4.00	0.039705	0.0816
3	150	2.67	0.200509	0.1284
4	200	2.00	0.635294	0.4227
5	250	1.60	1.55101	1.5298
6	300	1.34	3.18425	3.1563
7	350	1.14	5.95687	5.507
8	400	1.00	10.1647	10.087

Table.2: Tabular form for length and thickness variation with respect to theoretical and practical deflection

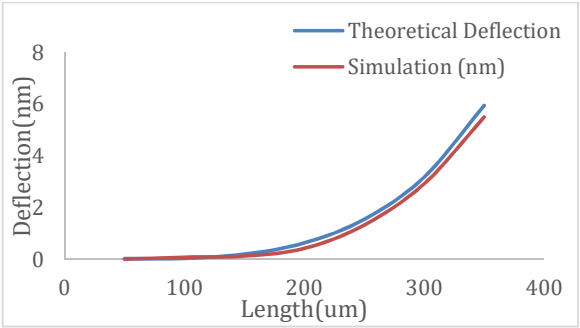

Fig.5: Comparison between length variation and deflection (theoretical and practical)

Thickness of cantilever is varied and the corresponding deflection values are noted. It is observed that as thickness is increasing, deflection value is decreasing.

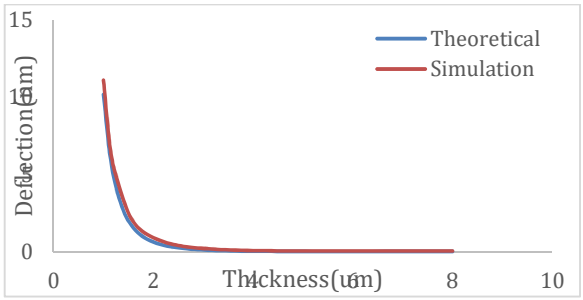

Fig.6: Comparison between thickness and deflection (theoretical and practical)

Effect of applied stress on micro cantilever:

Applied stress is varied and response is observed.

S.No.	Applied Stress(uN/m^2)	Deflection (nm)	
		Theoretical	Practical
1	10	0.127	0.1245
2	20	0.3541	0.3691
3	30	0.5811	0.5536
4	40	0.8082	0.7382
5	50	1.3529	1.1227
6	60	2.6235	2.3792
7	70	3.8941	3.5218
8	80	4.1647	4.0763
9	90	5.1435	5.0609
10	100	6.2705	5.8454

Table.3: Tabular form for stress variation

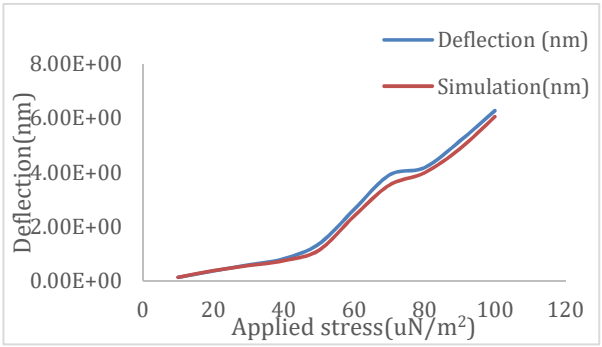

Fig.7: Comparison between stress applied and deflection (theoretical and simulation).

Effect of position of double layer piezoresistor:

The piezoresistor element is placed on the surface of the cantilever to form a double layer microcantilever. Further the position of the piezoresistor is varied from the free end to fixed end of the cantilever to find the optimum position of the piezoresistor. The length of piezoresistor is varied and the deflection is noted. At 50µm maximum deflection is obtained. So, it is selected as optimized value.

S.No.	Position (um)	Deflection (nm)	Stress (σmax)	Sensitivity (ΔR/R)
1	180	0.5395	2.12	0.0001
2	160	0.7949	3.96	0.0003
3	140	1.0239	6.66	0.0004
4	120	1.2517	11.08	0.0007
5	100	1.5717	21.61	0.0014
6	80	1.6951	31.31	0.0021
7	60	1.7042	60.36	0.0040
8	50	2.1287	601.80	0.0072
9	40	1.888	145.33	0.0397
10	20	1.8237	108.56	0.0096

Table 4: Tabular form for double layer position variation of piezoresistor and deflection

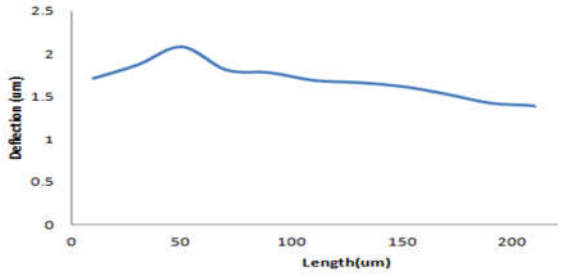

Fig 8: Comparison of position of the double layer Piezoresistive cantilever with deflection.

Effect of position of single layer piezoresistor:

S.No.	**Position (um)**	**SL Deflection (nm)**	**Stress (σ_{max})**	**Sensitivity (ΔR/R)**
1	180	0.7865	3.09502	0.0002
2	160	1.2861	6.40538	0.0004
3	140	1.6763	10.9045	0.0007
4	120	1.9487	17.2541	0.0011
5	100	2.0917	26.6691	0.0018
6	80	2.5407	50.6155	0.0033
7	60	2.7613	97.7960	0.0065
8	50	2.6919	137.286	0.0617
9	40	2.8829	229.731	0.0152
10	20	2.9311	934.288	0.0091

Table.5: Tabular form for single layer position variation of piezoresistor and deflection.

Previously the double layer piezoresistive cantilever is designed placing the piezoresistor on the surface of the cantilever while the proposed single layer piezoresistive cantilever is having the piezoresistive embedded into the cantilever. Further, the position of the piezoresistor on the cantilever is optimized, by varying the leg length of the piezoresistor

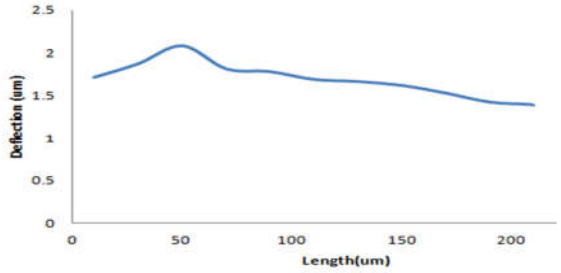

Fig.9: Comparison of position of the single layer Piezoresistive cantilever with deflection.

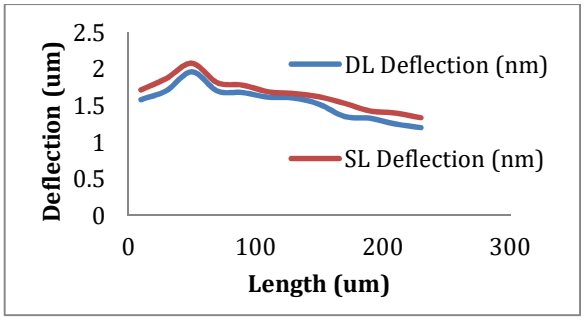

Fig10: Comparison of the deflection with change in leg length of the piezoresistor on the double and single layer

Effect of change in leg width of Piezoresistive micro cantilever:

The thickness of piezoresistor is varied and the deflection is noted. At 10µm maximum deflection is obtained. So, it is selected as optimized value.

S. No.	Leg width(um)	Deflection (nm)	Stress(σ_{max})
1	40	1.3704	6.5779
2	30	1.8125	8.7000
3	20	2.1581	10.3588
4	10	2.577	12.3696

Table.6: Tabular form for variation of leg width of piezoresistor and deflection.

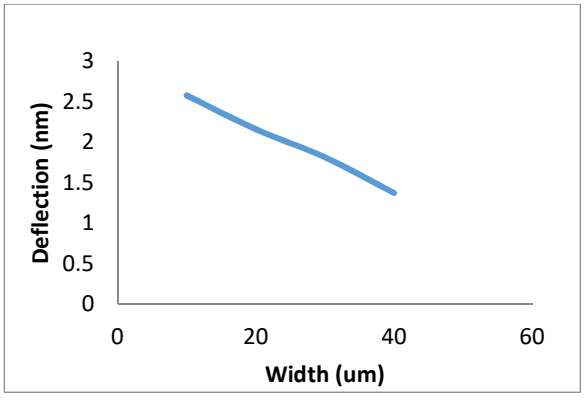

Fig.10: Comparison of variation of leg width variation with deflection

CONCLUSION:

The moto of this project is to design a Piezoresistive cantilever for mass sensing. For this initially, a plain micro cantilever beam with dimensions 200µm length, 100µm width and 2µm thickness was designed using silicon as material. The length of cantilever is varied and the deflection is noted. In the same way thickness of cantilever is varied and corresponding deflection values are calculated. It is observed by simulations that as length is increases deflection increases, and as thickness is increases deflection decreases. Thus, the length, width and height values were optimised. Stress of micro cantilever is also varied and the response is observed. Later single Layer piezoresistor microcantilever was designed to improve the response and reduce the fabrications issues arised with double layer microcantilever. It was concluded from FEM simulations that the single layer piezoresistive microcantilever is showing a better deflection, sensitivity for the stress variations compared to double layer piezoresistive microcantilever. Mass sensing will be obtained by attracting micro molecules to Piezoresistive cantilever.

Acknowledgement

The authors sincerely thank SERB-DST for providing funding under ECRA scheme with file no ECR/2017/001183 for the project titled “Design and development of a microcantilever structured sensor for determining volatile organic compounds”.

REFERENCES:

[1] Ribu Mathew, A. Ravi Sankar A Review on Surface Stress-Based Miniaturized Piezoresistive SU-8 Polymeric Cantilever Sensors Springer Journal of Nano-Micro Lett. (2018) 10:35;https://doi.org/10.1007/s40820-018-0189-1

[2] G. Sapra, P. Sharma, Design and analysis of MEMS MWCNT/epoxy strain sensor using COMSOL. Pramana - J.Phys.89(1), 10(2017); https://doi.org/10.1007/s12043-017-1398-8

[3] Joseph C. Doll, Sung-Jin Park, and Beth L. Pruitt, Design optimization of piezoresistive cantilevers for force sensing in air and water, Journal of Applied Physics 106, 064310 (2009); doi: 10.1063/1.3224965

[4] Joseph C. Doll, Sung-Jin Park, and Beth L. Pruitt, An instrumentation design for microsignal output from piezoresistive microcantilever biosensor for human stress, The 4th 2011 Biomedical Engineering International Conference, 2012, DOI: 10.1109/BMEiCon.2012.6172011

[5] Rajesh K. Burra; Jyothi Vankara; D. V. Rama Kota Reddy, Effect of added mass using resonant peak shifting technique, J. of Micro/Nanolithography, MEMS, and MOEMS, 11(2), 021203 (2012) https://doi.org/10.1117/1.JMM.11.2.021203

[6] Sh Mohd Firdaus, Husna Omar and Ishak Abd Azid, High Sensitive Piezoresistive Cantilever MEMS Based Sensor by Introducing Stress Concentration Region (SCR), 2012, http://dx.doi.org/10.5772/48426